ClinGen
Clinical Genome Resource

Defining the clinical relevance of genes & variants for precision medicine and research...

Scoring Case-Level Data

Erin Rooney Riggs, MS, CGC
Assistant Professor, Autism & Developmental Medicine Institute
Geisinger - Danville, Pennsylvania, USA
eriggs@geisinger.edu

(On behalf of the ACMG/ClinGen Copy Number Variant Interpretation Working Group)

Today’s Attendance URL and QR code:

https://tinyurl.com/AttendanceJan302020

Reminder: Questions

- Type your questions into the “Q&A” box
- Monitored by committee members
  - Will verbally answer as many as time allows (at the end)
  - May receive a typed answer through the Q&A box from a committee member
  - Unanswered questions will be saved for consideration during the March 12 Q&A webinar

Today's Focus

Section 4: Detailed evaluation of genomic content using cases from published literature, public databases, and/or internal lab data ***(Skip to section 5 if either your CNV overlapped with an established HI gene/region in section 2, OR there have been no reports associating either the CNV or any genes within the CNV with human phenotypes caused by loss of function [LOF] or copy-number loss)***

Individual case evidence—de novo occurrences	Reported proband (from literature, public databases, or internal lab data) has either: • A complete deletion of or a LOF variant within gene encompassed by the observed copy-number loss OR • An overlapping copy-number loss similar in genomic content to the observed copy-number loss AND…	See categories below	
	4A. …the reported phenotype is highly specific and relatively unique to the gene or genomic region,	Confirmed de novo: 0.45 points each Assumed de novo: 0.30 points each *(range: 0.15 to 0.45)*	0.90 (total)
	4B. …the reported phenotype is consistent with the gene/genomic region, is highly specific, but not necessarily unique to the gene/genomic region.	Confirmed de novo: 0.30 points each Assumed de novo: 0.15 point each *(range: 0 to 0.45)*	
	4C. …the reported phenotype is consistent with the gene/genomic region, but not highly specific and/or with high genetic heterogeneity.	Confirmed de novo: 0.15 point each Assumed de novo: 0.10 point each *(range: 0 to 0.30)*	
Individual case evidence—inconsistent phenotype	**4D**. …the reported phenotype is NOT consistent with what is expected for the gene/genomic region or not consistent in general.	0 points each *(range: 0 to −0.30)*	−0.30 (total)
Individual case evidence—unknown inheritance	**4E**. Reported proband has a highly specific phenotype consistent with the gene/genomic region, but the inheritance of the variant is unknown.	0.10 points each *(range: 0 to 0.15)*	0.30 (total)
Individual case evidence—segregation among similarly affected family members	**4F**. 3–4 observed segregations	0.15	0.45
	4G. 5–6 observed segregations	0.30	
	4H. 7 or more observed segregations	0.45	
Individual case evidence—nonsegregations	**4I**. Variant is NOT found in another individual in the proband's family AFFECTED with a consistent, specific, well-defined phenotype (no known phenocopies).	−0.45 points per family *(range: 0 to −0.45)*	−0.90 (total)
	4J. Variant IS found in another individual in the proband's family UNAFFECTED with the specific, well-defined phenotype observed in the proband.	−0.30 points per family *(range: 0 to −0.30)*	−0.90 (total)
	4K. Variant IS found in another individual in the proband's family UNAFFECTED with the nonspecific phenotype observed in the proband.	−0.15 points per family *(range: 0 to −0.15)*	−0.30 (total)

Where to begin?

- If you've reached this point, you know that the CNV under evaluation:
  - Contains protein-coding elements (Section 1)
  - Is not known to overlap with any *established* dosage sensitive or benign genes/genomic regions (Section 2)
- Assess whether there is any evidence to suggest that the region itself (or at least one gene therein) causes disease in a dosage-dependent manner
  - For LOSSES: Is there evidence that loss of this gene/genomic region causes a consistent phenotype?
    - Note: Remember that intragenic duplications can act as LOF
  - For whole gene or multi-genic GAINS: Is there evidence that extra copies of this gene/genomic region causes a consistent phenotype?

Start by assessing evidence for the CNV region as a whole

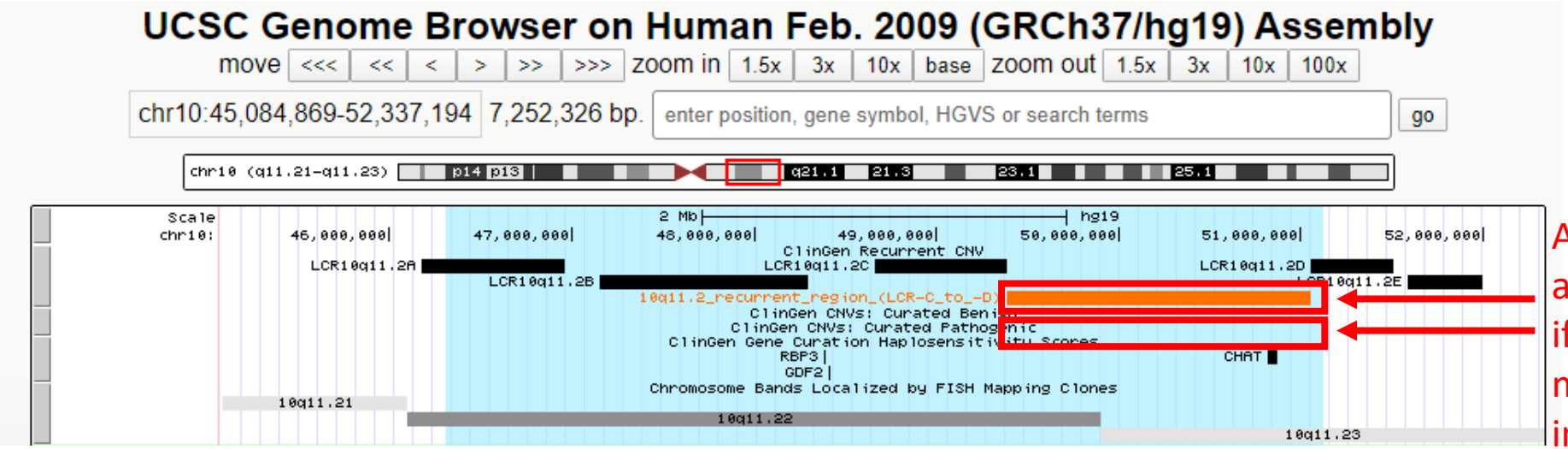

A review is available, even if it does not meet criteria for inclusion here.

- Quick literature search by cytoband information
  - Start specific, move towards more general if no information is uncovered
  - Example: Start with “10q11.22q11.23,” move toward “10q11.22” and “10q11.23,” then “10q11” to ensure any relevant information is found
- “ClinGen Recurrent CNV” track (available through Dosage site) can also be a useful resource here – alerts you that a review exists, even if it is not scored at a “3” or “Dosage Sensitivity Unlikely.”

Assessing Evidence for the CNV as a Whole

- Recognize that searching by cytoband may bring you irrelevant results
  - Reported CNVs may have little or no overlap with yours
  - If your CNV is within the same cytoband as a well-studied region (but is not that region), it may be difficult to hone in on relevant evidence
- However, this is an important first step to ensure that your focus isn't too narrow
  - In some cases, large, multi-genic losses or gains are reported before the gene of interest is identified (or while evidence supporting that gene is accumulating)

Which other CNVs are appropriate to consider?

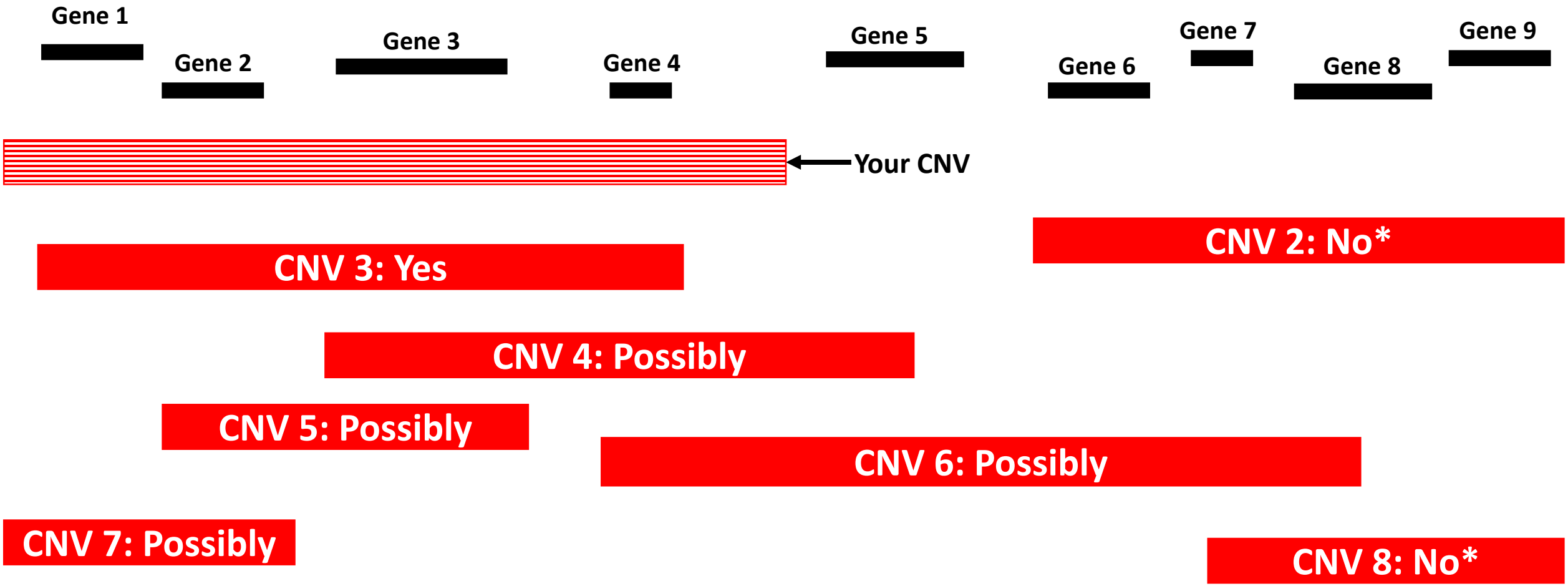

* Exceptions may apply

What if Gene 2 was the gene of interest?

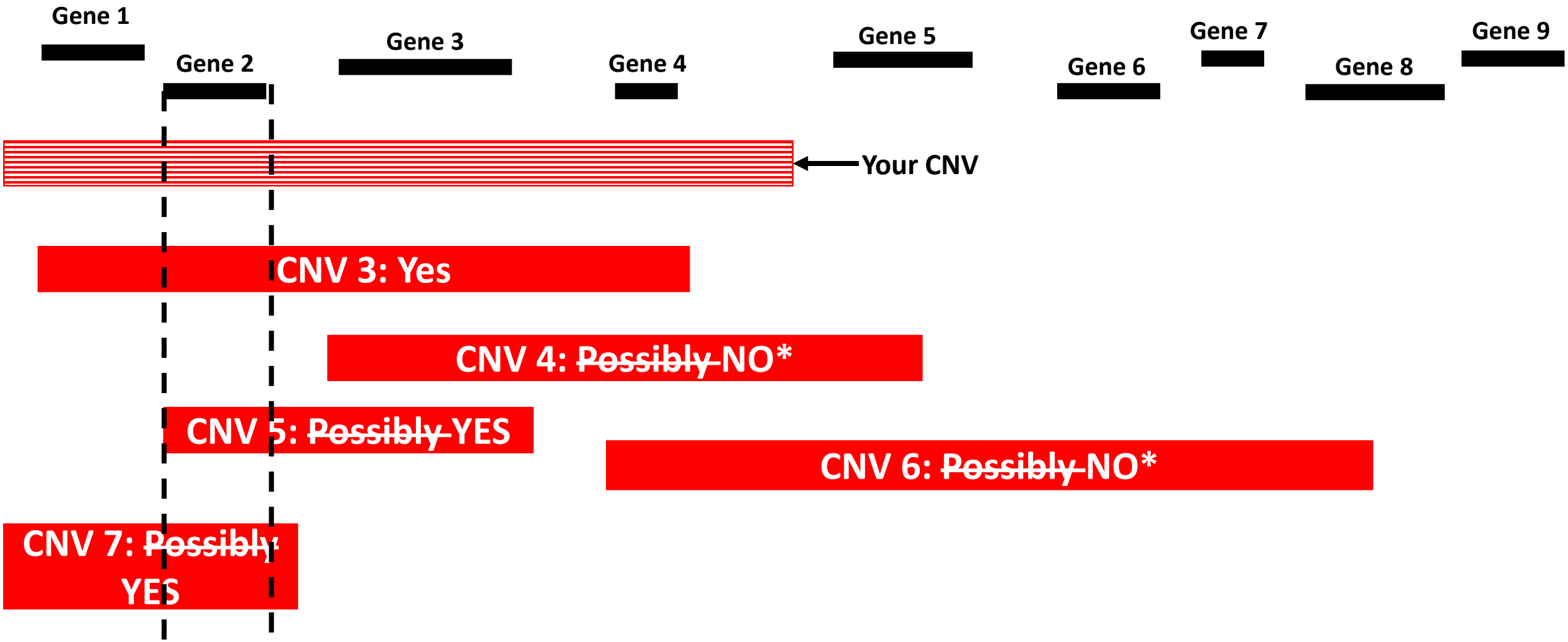

* Exceptions may apply

What if Gene 4 was the gene of interest?

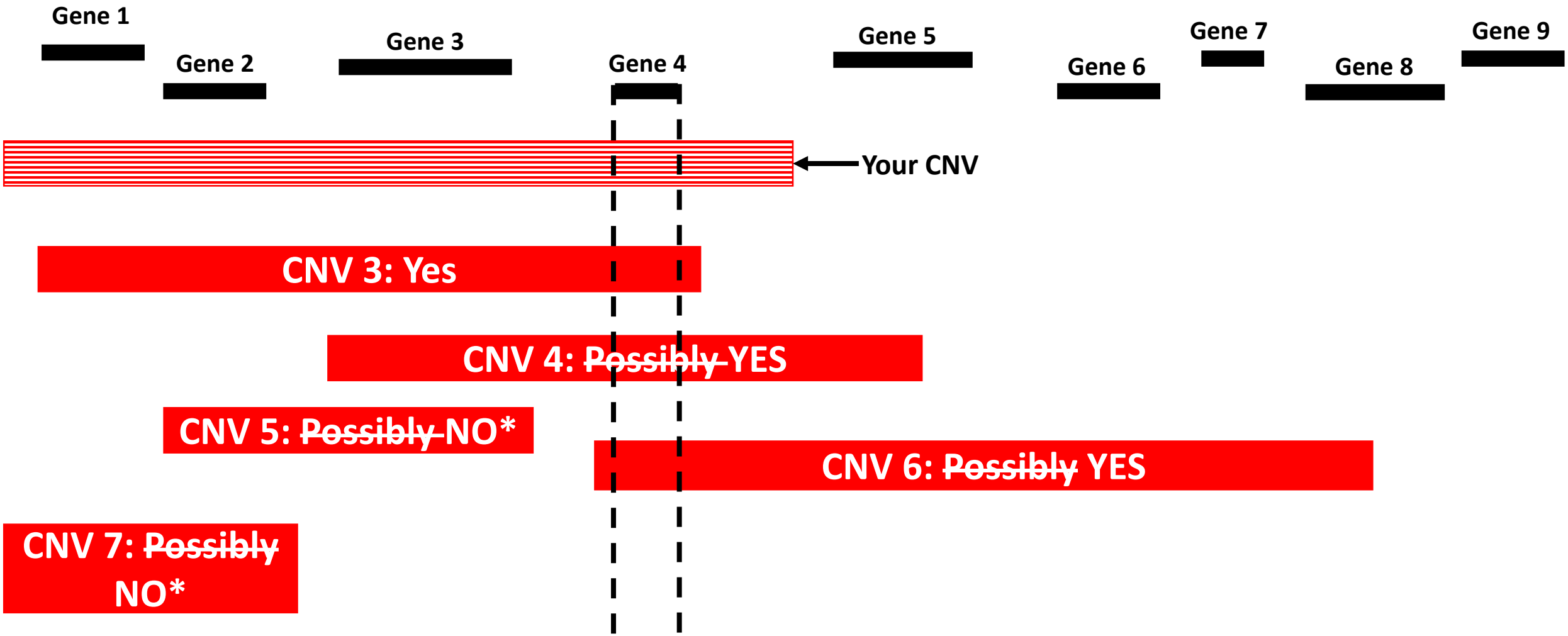

* Exceptions may apply

Next step: Assessing the genes within the CNV

- If there is no compelling region-level evidence, or the region-level evidence alone isn't enough to lead you to a classification of Pathogenic, evaluate the individual genes within the CNV
- Where to begin?
  - Did your region search point you toward a gene of interest? If so, consider starting there.
  - If not:
    - Are there are genes evaluated by Dosage Sensitivity, but not given a score of 3?
    - Are there any OMIM Morbid genes?
    - Are there any genes with compelling HI predictor data (for loss) (Section 2H)?
    - Are there any OMIM genes?
    - Is there any relevant clinical literature for any of these genes?
  - Walk through this thought process, assuming you are evaluating a deletion of the following region:
    - Chr22:31012191-32389946 (GRCh37)

DECIPHER is a good resource for visualizing this information

DECIPHER GRCh37 | About | Browse | DDD(UK) | Search DECIPHER | Join | Login

Search results for 'position:22:31012191-32389946' (Refine Search)

Open-access patients 30 | CNV Syndromes 0 | DDD Research Variants 3 | Genes 35

Results | Browser

Genes: 1 to 10 of 19 (out of 35 total)

Show: ☐ OMIM ☐ Morbid ☐ DDG2P ☑ Protein coding | Filter...

Name	Location	Description	OMIM	Morbid	DDG2P	%HI	pLI	Links
DEPDC5	22 32149944 32303012	DEP domain containing 5, GATOR1 subcomplex subunit	✔	✔	Y	37.91	1.00	View
DRG1	22 31795509 31924726	developmentally regulated GTP binding protein 1	✔	-	-	9.62	0.95	View
DUSP18	22 31048038 31063877	dual specificity phosphatase 18	✔	-	-	65.03	0.06	View
EIF4ENIF1	22 31832963 31892094	eukaryotic translation initiation factor 4E nuclear import factor 1	✔	-	-	21.04	1.00	View
INPP5J	22 31518717 31530682	inositol polyphosphate-5-phosphatase J	✔	-	-	48.38	0.00	View
LIMK2	22 31608225 31676066	LIM domain kinase 2	✔	-	-	33.30	0.01	View
MORC2	22 31321117 31364284	MORC family CW-type zinc finger 2	✔	✔	-	36.79	1.00	View
OSBP2	22 31089769 31303811	oxysterol binding protein 2	✔	-	-	55.99	0.04	View
PATZ1	22 31721790 31742218	POZ/BTB and AT hook containing zinc finger 1	✔	-	-	31.31	0.99	View
PIK3IP1	22 31677579 31688520	phosphoinositide-3-kinase interacting protein 1	-	-	-	65.38	0.06	View

DECIPHER GRCh37 About Browse DDD(UK) Search DECIPHER Join Login

Search results for 'position:22:31012191-32389946' (Refine Search)

Open-access patients 30 | CNV Syndromes 0 | DDD Research Variants 3 | Genes 35

Results | Browser

Genes: 1 to 10 of 19 (out of 35 total)

Show: OMIM Morbid DDG2P Protein coding Filter...

Name	Location	Description	OMIM	Morbid	DDG2P	%HI	pLI	Links
TCN2	22 31002825 31023265	transcobalamin 2	✔	✔	Y	66.37	0.02	View
MORC2	22 31321117 31364284	MORC family CW-type zinc finger 2	✔	✔	-	36.79	1.00	View
DEPDC5	22 32149944 32303012	DEP domain containing 5, GATOR1 subcomplex subunit	✔	✔	Y	37.91	1.00	View
SLC35E4	22 31031639 31065003	solute carrier family 35 member E4	-	-	-	70.38	0.03	View
DUSP18	22 31048038 31063877	dual specificity phosphatase 18	✔	-	-	65.03	0.06	View
OSBP2	22 31089769 31303811	oxysterol binding protein 2	✔	-	-	55.99	0.04	View
SMTN	22 31460091 31500743	smoothelin	✔	-	-	49.70	0.76	View
INPP5J	22 31518717 31530682	inositol polyphosphate-5-phosphatase J	✔	-	-	48.38	0.00	View
PLA2G3	22 31530795 31536593	phospholipase A2 group III	✔	-	-	75.52	0.00	View
RNF185	22 31556168 31603005	ring finger protein 185	-	-	-	17.31	0.68	View

10

Previous 1 2 Next

OMIM Morbid Genes – Assess Mode of Inheritance

* 613441

TRANSCOBALAMIN II; TCN2

Gene-Phenotype Relationships

Location	Phenotype	Phenotype MIM number	Inheritance	Phenotype mapping key
22q12.2	Transcobalamin II deficiency	275350	AR	3

* 616661

MORC FAMILY CW-TYPE ZINC FINGER PROTEIN 2; MORC2

Gene-Phenotype Relationships

Location	Phenotype	Phenotype MIM number	Inheritance	Phenotype mapping key
22q12.2	Charcot-Marie-Tooth disease, axonal, type 2Z	616688	AD	3

* 614191

DEP DOMAIN-CONTAINING PROTEIN 5; DEPDC5

Gene-Phenotype Relationships

Location	Phenotype	Phenotype MIM number	Inheritance	Phenotype mapping key
22q12.2-q12.3	Epilepsy, familial focal, with variable foci 1	604364	AD	3

- "When selecting the gene(s) to take through the scoring metric, give precedence to the genes in the region that are associated with dominantly inherited disorders caused by an appropriate mutational mechanism."
  - May choose to comment on the potential carrier status for transcobalamin II deficiency on the report (more on March 5)
- 2 genes in the interval associated with disease inherited in an autosomal dominant manner
  - Check disease mechanism

OMIM Morbid Genes – Assess Mechanism

614191

Download A

DEP DOMAIN-CONTAINING PROTEIN 5; DEPDC5

Allelic Variants (12 Selected Examples) :

All ClinVar Variants

Number	Phenotype	Mutation	SNP	gnomAD	ClinVar
.0001	EPILEPSY, FAMILIAL FOCAL, WITH VARIABLE FOCI 1	DEPDC5, TYR7TER	rs768241563	rs768241563	RCV000043579
.0002	EPILEPSY, FAMILIAL FOCAL, WITH VARIABLE FOCI 1	DEPDC5, ARG555TER	rs587776973	rs587776973	RCV000720916...
.0003	EPILEPSY, FAMILIAL FOCAL, WITH VARIABLE FOCI 1	DEPDC5, 3-BP DEL, 488TGT	rs587776974	-	RCV000043581
.0004	EPILEPSY, FAMILIAL FOCAL, WITH VARIABLE FOCI 1	DEPDC5, TRP1369TER	rs587776975	-	RCV000043582
.0005	EPILEPSY, FAMILIAL FOCAL, WITH VARIABLE FOCI 1	DEPDC5, 1-BP DEL, 1122A	rs879255234	-	RCV000043583
.0006	EPILEPSY, FAMILIAL FOCAL, WITH VARIABLE FOCI 1	DEPDC5, ARG239TER	rs587776976	-	RCV000498718...
.0007	EPILEPSY, FAMILIAL FOCAL, WITH VARIABLE FOCI 1	DEPDC5, ARG328TER	rs587776977	-	RCV000043585
.0008	EPILEPSY, FAMILIAL FOCAL, WITH VARIABLE FOCI 1	DEPDC5, ARG1087TER	rs587777458	rs587777458	RCV000128400
.0009	EPILEPSY, FAMILIAL FOCAL, WITH VARIABLE FOCI 1	DEPDC5, ARG487TER	rs587777459	rs587777459	RCV000128401
.0010	EPILEPSY, FAMILIAL FOCAL, WITH VARIABLE FOCI 1	DEPDC5, ARG843TER	rs541024038	rs541024038	RCV000157606
.0011	EPILEPSY, FAMILIAL FOCAL, WITH VARIABLE FOCI 1	DEPDC5, THR864MET	rs564667614	rs564667614	RCV000717165...
.0012	EPILEPSY, FAMILIAL FOCAL, WITH VARIABLE FOCI 1	DEPDC5, GLN140TER	rs786205703	-	RCV000170597

616661

Download As

MORC FAMILY CW-TYPE ZINC FINGER PROTEIN 2; MORC2

Allelic Variants (3 Selected Examples) :

All ClinVar Variants

Number	Phenotype	Mutation	SNP	gnomAD	ClinVar
.0001	CHARCOT-MARIE-TOOTH DISEASE, AXONAL, TYPE 2Z	MORC2, ARG252TRP	rs864309503	-	RCV000624201...
.0002	CHARCOT-MARIE-TOOTH DISEASE, AXONAL, TYPE 2Z	MORC2, SER25LEU	rs864309504	-	RCV000202460...
.0003	CHARCOT-MARIE-TOOTH DISEASE, AXONAL, TYPE 2Z	MORC2, GLU236GLY	rs886037934	-	RCV000240855...

Also…

ClinGen
Clinical Genome Resource

Get Started | About Us | Curation Activities | Working Groups | Expert Panels | Documents & Announcements | Tools

Search: Gene | Gene... | Go | Browse Curations

MORC2

Name	MORC2	**External Resources**	View external resources
HGNC ID	HGNC:23573	**ClinVar Variants**	View ClinVar Variants
Cytogenetic Location	22q12.2	**GeneReviews®**	View GeneReviews

ClinGen's Curation Summaries | External Genomic Resources | ClinVar Variants

ClinGen has not yet curated **MORC2**. Please see the External Genomic Resources tab to find links to information from other sources about **MORC2**.

If you would like to share information on this gene or request that this gene be considered for curation, please sign-in to share information.

Curation Activities | Working Groups | Expert Panels | Documents & Announcements | Tools

Go | Browse Curations

DEPDC5

Name	DEPDC5	**External Resources**	View external resources
HGNC ID	HGNC:18423	**ClinVar Variants**	View ClinVar Variants
Cytogenetic Location	22q12.2-q12.3	**GeneReviews®**	View GeneReviews

ClinGen's Curation Summaries | External Genomic Resources | ClinVar Variants

***DEPDC5* - familial focal epilepsy with variable foci** | MONDO:0020310

urated by	Classification	Date	Report
Gene-Disease Validity	**Definitive**	08/24/2018	View report

Assertion criteria	Genetic Evidence (0-12 points)	Experimental Evidence (0-6 points)	Total Points (0-18)	Replication Over Time (Y/N)
Description	Case-level, family segregation, or case-control data that support the gene-disease association	Gene-level experimental evidence that support the gene-disease association	Sum of Genetic & Experimental Evidence	> 2 pubs w/ convincing evidence over time (>3 yrs)
Assigned				YES
		DEFINITIVE	12-18 AND replication over time	
Valid contradictory evidence (Y/N)*	NO			
CALCULATED CLASSIFICATION (DATE)		Definitive		08/24/2018
EXPERT CURATION (DATE)		**Definitive**		08/24/2018
EVIDENCE SUMMARY		The DEPDC5 gene has been associated with autosomal dominant familial focal epilepsy with variable foci using the ClinGen Clinical Validity Framework as of 8/6/2018. This association was made using case-level data and experimental data. At least 12 variants (e.g. missense, in-frame indel, nonsense, frameshift, large deletion) have been reported in humans. DEPDC5 was first associated with this disease in humans as early as 2013 (Dibbens et al.). Variants in this gene have been observed in at least 17 probands in 8 publications (PMID: 23542697, 24283814, 23542701, 29761115, 29861134, 29950950, 29708509, 29481864). Variants in this gene segregated with disease in at least 48 additional family members (PMID: 23542697). More evidence is available in the literature, but the maximum score for genetic evidence (12 pts.) has been reached. The mechanism for disease is haploinsufficiency (PMID: 23542697). This gene-disease association is supported by animal models, expression studies, and in vitro cell-culture assays (PMID: 29761115, 29861134, 29950950, 29708509, 29481864). Of note, variants in this gene have been found to exhibit reduced penetrance in families with disease (PMID: 23542697, 24283814, 23542701). In summary, DEPDC5 is definitively associated with autosomal dominant familial focal epilepsy with variable foci. This has been repeatedly demonstrated in both the research and clinical diagnostic settings, and has been upheld over time. This classification was approved by the ClinGen Epilepsy Gene Curation Expert Panel on 8/7/2018.		

Start with *DEPDC5*, but also look further into the mechanisms associated with both *MORC2* and *TCN2*. If there is reason to suspect HI, consider commenting on this in the clinical report, in addition to the classification driven by *DEPDC5*. Reporting considerations will be discussed further on March 5.

What if the region has no OMIM Morbid Genes?

- Quick literature review of predicted HI genes (if applicable), OMIM genes
  - Start broad, provide specifics if results too numerous to assess
- Example: Search PubMed for "Gene X" (gene name only)
  - Returns 10 results. Review titles/abstracts to determine if any are relevant. OR
  - Returns 100 results. Consider amending search to include terms like:
    - "GeneX AND loss of function" and/or
    - "GeneX AND haploinsufficiency" and/or
    - "GeneX AND deletion" and/or

      When evaluating losses
    - "GeneX AND Disease Y" (if applicable)
    - "GeneX AND duplication" (know that you may get some small/intragenic duplications that may actually be acting as LOF – read carefully) and/or
    - "GeneX AND triplosensitivity"

      When evaluating gains
  - Review titles/abstracts within reason to identify any relevant information
  - Repeat as needed

Once you have identified your gene of interest, start collecting evidence

- For losses: looking for evidence that LOF of this gene results in disease
  - Whole gene deletions (including only that gene or similar in gene content to your CNV, as appropriate)
  - Intragenic deletions predicted to undergo nonsense-mediated decay
  - Other putative LOF sequence variants (nonsense, frameshift, canonical +/- 1 or 2 splice site variants) predicted to undergo nonsense-mediated decay
  - Missense sequence variants may be considered ONLY if there is STRONG FUNCTIONAL EVIDENCE indicating LOF
- For gains: looking for evidence that an extra copy of this gene (triplosensitivity) results in disease
  - Duplications of this entire gene (or similar in gene content to your CNV, as appropriate)
  - Do not count intragenic duplications here – may be acting as LOF
  - Do not count gain of function missense variants here – different mechanism

Where to find case-level data

- Primary source should be peer-reviewed scientific literature
  - Typically provides a narrative with sufficient evidence to independently assess the case
  - Others can access this information and verify your assessment
- Other sources may include:
  - Public databases
    - May not provide enough information to independently assess the case- use with caution
    - If used, provide clear description of exactly which cases are being counted
  - Internal laboratory databases
    - Others cannot access this information to verify your assessment – describe thoroughly, consider submitting to public database
    - Consider possible sources of bias: platform-specific artifacts, population sampling bias, etc.

Case-Level Scoring Differs by Phenotype, Inheritance

- Phenotype: Highly specific, well-defined phenotypes > nonspecific phenotypes > disparate phenotypes
  - The more non-specific your phenotype, the less you can be certain that it is caused by your gene of interest and not other genes/factors
- Inheritance: *De novo* +/- strong supportive segregation > unknown inheritance
  - Knowing how a variant segregates (or doesn't) in a family can provide valuable information when trying to assess its potential role in disease
- In general, more weight should be given to cases where you can be more certain that a given phenotype is truly associated with your gene or genomic region of interest, and the extent to which other possible causes can be ruled out.

How to use the scoring ranges

- Some pieces of evidence are stronger than others, even within the same categories
  - Ranges offer flexibility to accommodate for this
- Consider an upgrade if:
  - Functional evidence demonstrates that a variant is acting as LOF/triplosensitive (as opposed to just assumed)
  - Other potential causes of the phenotype have been effectively ruled out
- Consider a downgrade (or even not scoring) if:
  - Other potential causes of the phenotype HAVE NOT effectively been ruled out (e.g., single-gene sequencing)
  - There is some reason to believe the variant is NOT acting as LOF/triplosensitive (e.g., a nonsense variant in the last exon not expected to undergo NMD)
  - The variant is present at a frequency inconsistent with disease in the general population
  - The variant type is common in the general population

ZWILCH zwilch kinetochore protein

Dataset gnomAD v2.1.1 gnomAD SVs v2.1

Genome build	GRCh37 / hg19
Ensembl gene ID	ENSG00000174442
Canonical transcript ID	ENST00000307897
Region	15:66797298-66842116
References	Ensembl, UCSC Browser, and more

Constraint

Category	Exp. SNVs	Obs. SNVs	Constraint metrics
Synonymous	102	110	Z = -0.63 o/e = 1.08 (0.92 - 1.26)
Missense	298.2	317	Z = -0.39 o/e = 1.06 (0.97 - 1.17)
pLoF	34.2	25	pLI = 0 o/e = 0.73 (0.53 - 1.02)

exome genome Metric: Mean Save plot

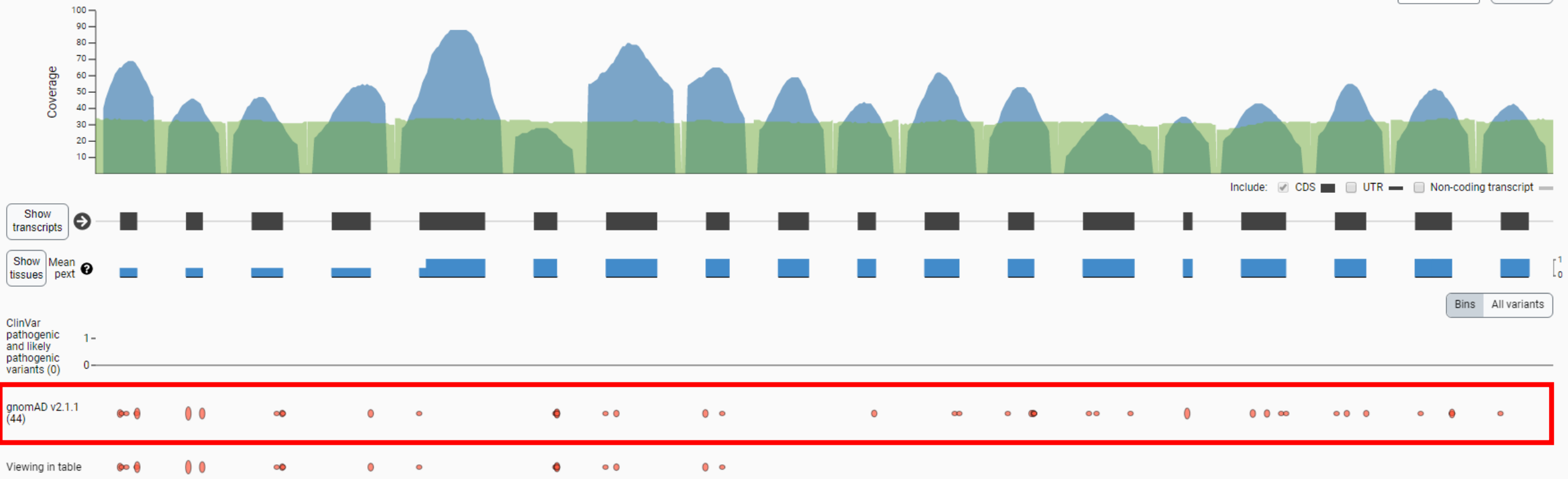

A note about variants in the general population…

- Always check variants you are considering counting from the literature in databases of population variation (such as gnomAD), particularly if the paper is older
- Keep your phenotype in mind when assessing this information – does this make sense in the context of my phenotype?
  - Does the observed frequency make sense in terms of the prevalence of the disorder?
  - Is your phenotype adult-onset or childhood-onset?
  - Is it severe, or could it be something easily missed?
  - Would it make sense for someone with this phenotype to potentially be recruited (as a case or a control) for a study focused on a common condition, like diabetes, high blood pressure, etc.?

http://cardiodb.org/allelefrequencyapp/

Frequency Filter | HOME | calculate AF | calculate AC | explore architecture | inverse AF | penetrance | about

Inheritance:

- monoallelic
- biallelic

Prevalence = 1 in ... (people)

500

Allelic heterogeneity:

0 0.1 1

0 0.1 0.2 0.3 0.4 0.5 0.6 0.7 0.8 0.9 1

Genetic heterogeneity:

0 1

0 0.1 0.2 0.3 0.4 0.5 0.6 0.7 0.8 0.9 1

Penetrance:

0 0.5 1

0 0.1 0.2 0.3 0.4 0.5 0.6 0.7 0.8 0.9 1

Confidence:

0.9 0.95 0.99 0.999

Reference population size (alleles)

121412

Maximum credible population AF:

2e-04

Maximum tolerated reference AC:

33

Section 4: Detailed Evaluation of Genomic Content Using Published Literature, Public Databases, and/or Internal Lab Data

Section 4: Detailed Evaluation of Genomic Content Using Published Literature, Public Databases, and/or Internal Lab Data[11] *(Skip to Section 5 if either your CNV overlapped with an established HI gene/region in Section 2, OR there have been no reports associating either the CNV or any genes within the CNV with human phenotypes caused by loss of function (LOF) or copy number loss)*				
Individual case evidence – *de novo occurrences*[12]	Reported proband has either: • A complete deletion of or a LOF variant within gene encompassed by the observed copy number loss OR • an overlapping copy number loss similar in genomic content to the observed copy number loss AND…	See categories below		
	4A. …the reported phenotype is highly specific and relatively unique to the gene or genomic region	Confirmed[12] *de novo*: 0.45 points each Assumed[11] *de novo*: 0.30 points each *(Range[2]: 0.15 to 0.45)*	0.90 (total)	
	4B. …the reported phenotype is consistent with the gene/genomic region, is highly specific, but not necessarily unique to the gene/genomic region	Confirmed[12] *de novo*: 0.30 points each Assumed[11] *de novo*: 0.15 point each *(Range[2]: 0 to 0.45)*		
	4C. …the reported phenotype is consistent with the gene/genomic region, but not highly specific and/or with high genetic heterogeneity	Confirmed[12] *de novo*: 0.15 point each Assumed[12] *de novo*: 0.10 point each *(Range[2]: 0 to 0.30)*		
	4D.…the reported phenotype is NOT consistent with what is expected for the gene/genomic region or not consistent in general	0 points each (Range[2]: 0 to -0.30)	-0.30 (total)	

- Highly specific, relatively unique:
  - Fixed, dilated pupils (Gillespie syndrome)
  - Fetal adrenocortical cytomegaly (Beckwith-Wiedemann)
  - Conditions associated with biochemical abnormalities clearly tying them back to the gene under evaluation
- Highly specific, not necessarily unique
  - Leukodystrophy (47 clinical synopses in OMIM)
  - Metopic ridging (64 clinical synopses in OMIM)
- Not highly specific, and/or with high genetic heterogeneity
  - Developmental delay/intellectual disability
  - Autism
- When in doubt, go with the most conservative option

Confirmed vs. Assumed *De Novo*

- Confirmed vs. assumed refers to PARENTAL RELATIONSHIPS, not the *de novo* status of the variant
  - Parental relationships are confirmed when additional testing is done to confirm that BOTH the reported mother and father are indeed the biological parents
  - When assessing X-linked variants in XY males, only maternity needs to be confirmed
  - If the variant was identified by trio-based exome/genome, parental relationships can be considered confirmed
    - If variant identified in proband by exome/genome, then Sanger only for parents to confirm *de novo* status – parental relationships are assumed
  - When in doubt, go with the more conservative option.

What if the phenotype isn’t consistent (4D)?

- Need to consider whether this actually represents “anti” evidence
- Negative point values could be considered with increasing evidence of inconsistency.
- Example 1: *De novo* deletion of a particular gene reported twice in the literature - once in a 7yo with developmental delay, and once in a newborn with a congenital anomaly (0 points)
- Example 2: *De novo* deletion reported 5 times in the literature - all in well-phenotyped, older individuals - 1 with intellectual disability, 1 with a history of cardiac defect and normal development, 1 with a history of genitourinary anomalies and normal development, and 2 in general population individuals (-0.30 points)

Unknown Inheritance

Individual case evidence—unknown inheritance	**4E**. Reported proband has a highly specific phenotype consistent with the gene/genomic region, but the inheritance of the variant is unknown.	0.10 points each *(range: 0 to 0.15)*	0.30 (total)

- This category is most appropriate for highly specific phenotypes
  - Do not use in the setting of nonspecific phenotypes, such as intellectual disability/autism
- Example: Consider utilizing this category in the setting of an adult-onset disorder where obtaining parental samples is particularly difficult, and testing has been otherwise comprehensive

Segregation In Affected Family Members

Individual case evidence – segregation among similarly affected family members[13]	4F. 3-4 observed segregations	0.15	0.45	
	4G. 5-6 observed segregations	0.30		
	4H. 7 or more observed segregations	0.45		

- For simplicity, count only genotype +/phenotype + individuals, and/or obligate carriers

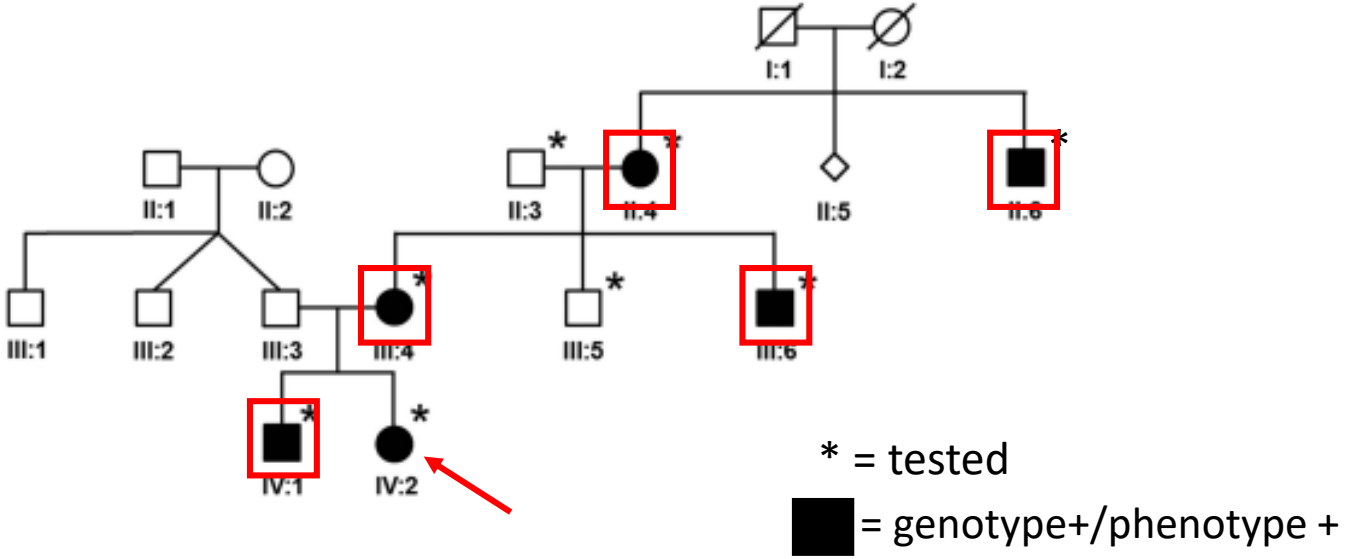

Segregation Example: AD Hypertrophic Cardiomyopathy

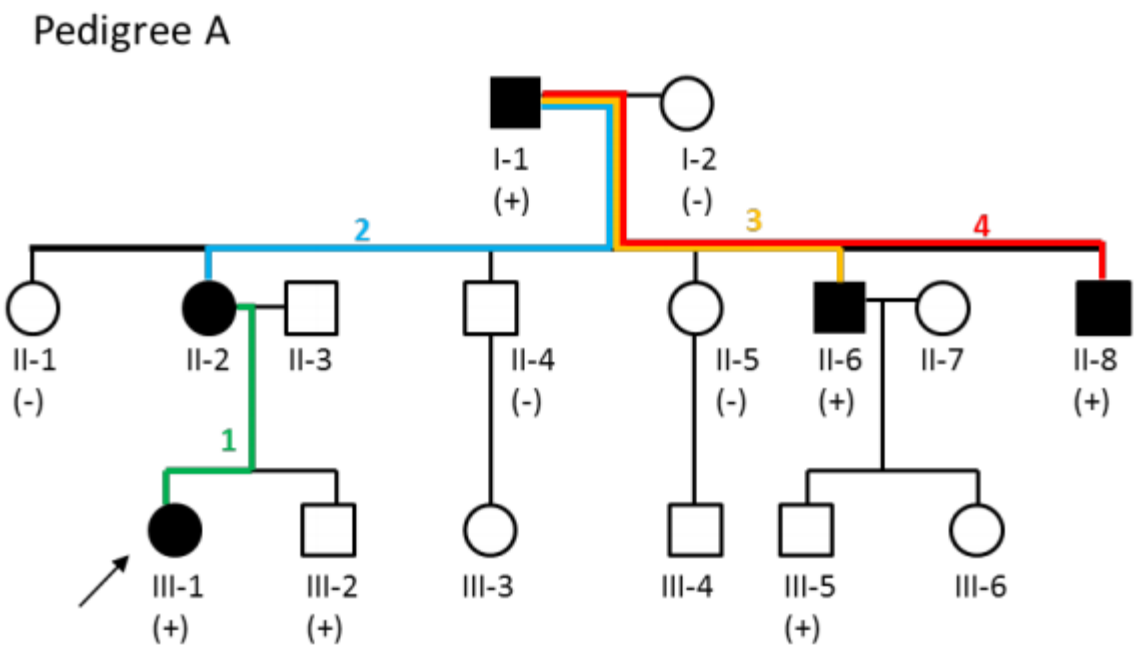

- In general, # of segregations = (# of affected individuals)-1
- To be conservative, count only genotype+/phenotype+ individuals and obligate carriers (such as II-2)
- This phenotype is known to have reduced/age-dependent penetrance – the 2 genotype+/phenotype- individuals (III-2, III-5) are not necessarily unusual. If this were a phenotype known to have complete penetrance, these individuals might cause you to not count this entire pedigree.
- CONSIDER YOUR PHENOTYPE!

Example from ClinGen Gene Curation SOP v7

Segregation Example: X-linked ID

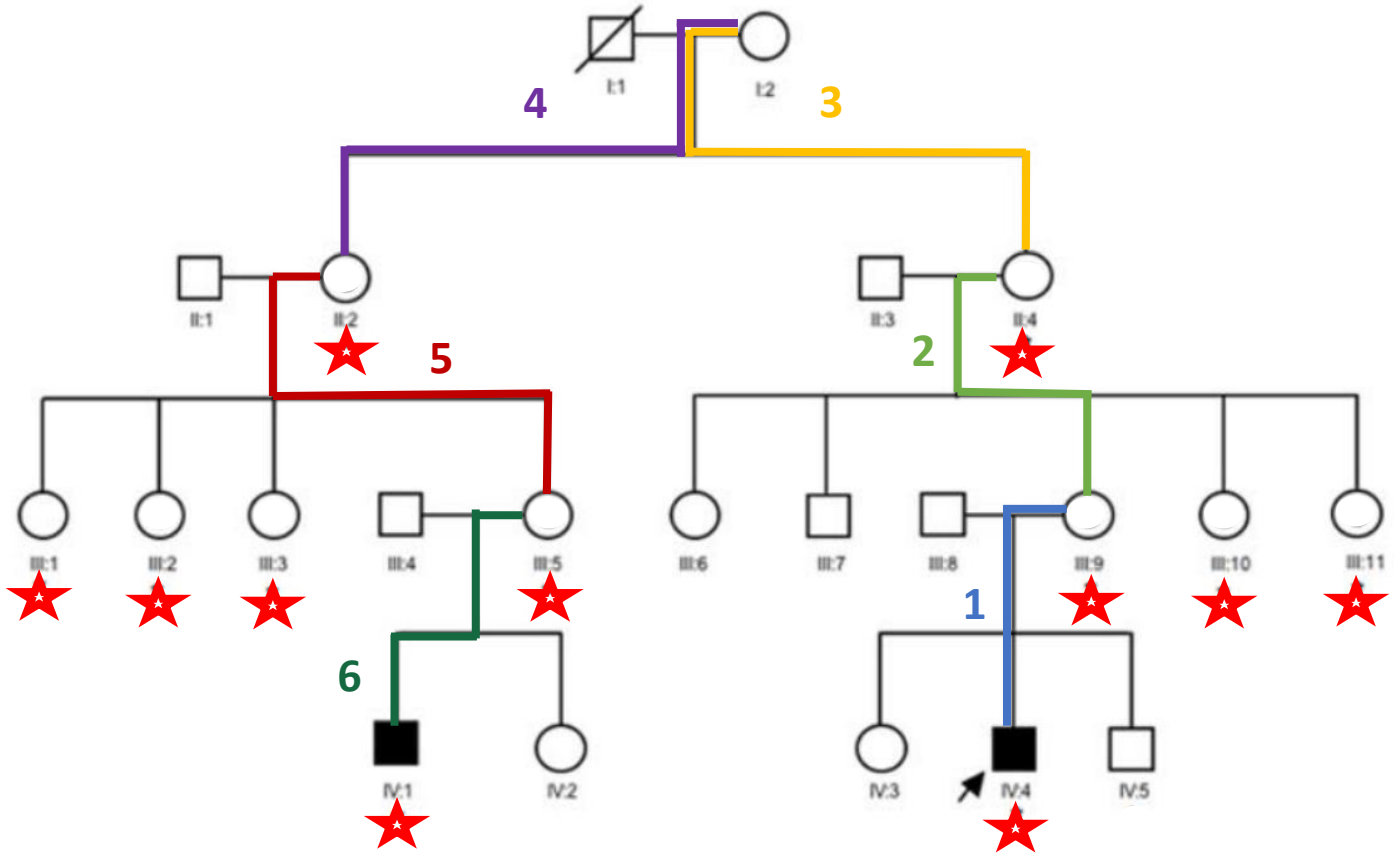

- X-linked pedigrees (with large numbers of genotype+ females) have the potential for inflated scoring
- Consider only counting those females directly linking the affected males.

★ = genotype+

Apparent non-segregation

Individual case evidence - Non-Segregations[14]	**4I**. Variant is NOT found in another individual in the proband's family AFFECTED with a consistent, specific, well-defined phenotype (no known phenocopies)	-0.45 points per family (Range[2]: 0 to -0.45)	-0.90 (Total)	
	4J. Variant IS found in another individual in the proband's family UNAFFECTED with the specific, well-defined phenotype observed in the proband	-0.30 points per family (Range[2]: 0 to -0.30)	-0.90 (Total)	
	4K. Variant IS found in another individual in the proband's family UNAFFECTED with the non-specific phenotype observed in the proband	-0.15 points per family (Range[2]: 0 to -0.15)	-0.30 (total)	

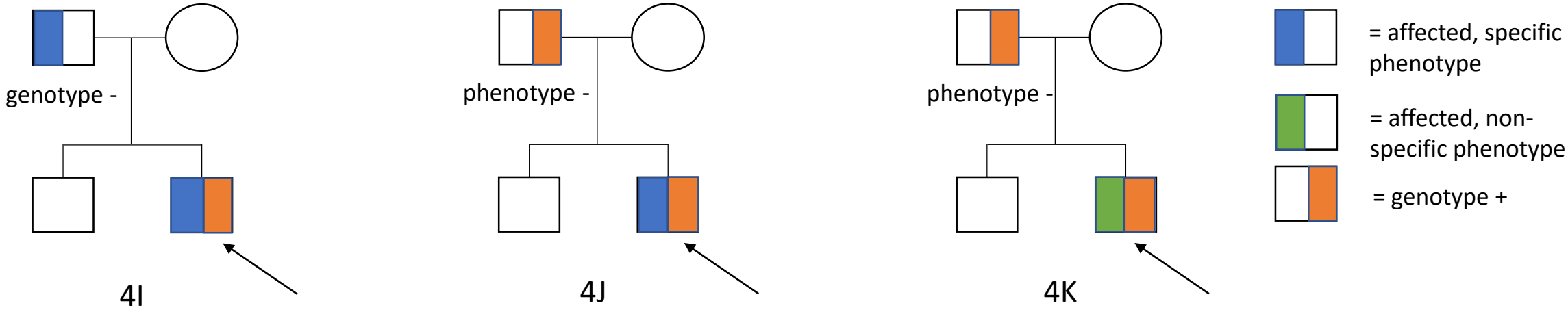

Non-Segregation: Negative vs. Zero points

- KNOW YOUR PHENOTYPE
- Is there a plausible explanation why the phenotype may not be present/observed/reported?
  - Known reduced penetrance
  - Known age-related penetrance
  - Not readily observable
  - Not properly evaluated
  - Variable expressivity
- If yes: consider zero points
- If no: consider negative points

How do I account for the presentation of the case under evaluation?

Section 5: Evaluation of inheritance pattern/family history for patient being studied			
Observed copy-number loss is de novo	**5A**. *Use appropriate category from de novo scoring section in section 4.*	*Use de novo scoring categories from section 4 (4A–4D) to determine score*	0.45
Observed copy-number loss is inherited	**5B**. Patient with **specific, well-defined** phenotype and no family history. CNV is inherited from an apparently unaffected parent.	−0.30 *(range: 0 to −0.45)*	−0.45
	5C. Patient with **nonspecific** phenotype and no family history. CNV is inherited from an apparently unaffected parent.	−0.15 *(range: 0 to −0.30)*	−0.30
	5D. CNV segregates with a consistent phenotype observed in the patient's family.	*Use segregation scoring categories from section 4 (4F–4H) to determine score*	0.45
Observed copy-number loss—nonsegregations	**5E**. *Use appropriate category from nonsegregation section in section 4.*	*Use nonsegregation scoring categories from section 4 (4I–4K) to determine score*	−0.45
Other	**5F**. Inheritance information is unavailable or uninformative.	0	0
	5G. Inheritance information is unavailable or uninformative. The patient phenotype is nonspecific, but is consistent with what has been described in similar cases.	0.10 *(range: 0 to 0.15)*	0.15
	5H. Inheritance information is unavailable or uninformative. The patient phenotype is highly specific and consistent with what has been described in similar cases.	0.30 *(range: 0 to 0.30)*	0.30

In general…

- The case under evaluation (Category 5) should be treated just as any other case you encounter in the literature (Category 4)
  - If your case is *de novo*, assign the same number of points you would in the *de novo* section of Category 4
  - If your case is inherited
    - Assign positive points as you would in Category 4 if the variant segregates with phenotype
    - Carefully consider whether or not to assign negative points if apparent non-segregation

Inheritance information is unavailable or uninformative

- Inheritance information uninformative –what does this mean?
  - Example: Parental testing is only available on one parent, and they do not carry the variant.
- In this instance, it may be appropriate to assign positive points to your case if their reported phenotype is consistent with what has been described in similar cases (Categories 5G-5H)
  - Use with caution in setting of non-specific phenotype
    - May choose not to assign any points if the situation warrants
  - Consider assigning more points for more specific phenotypes
- Will review further in example cases

Acknowledgements

- Christa Lese Martin
- Daniel Pineda Alvarez
- Swaroop Aradhya
- Erica Andersen
- Athena Cherry
- Sibel Kantarci
- Hutton Kearney
- Ankita Patel
- Gordana Raca
- Deborah Ritter
- Sarah South
- Erik Thorland
- Outside Reviewers (11)
- ClinGen Genomic Variant and Sequence Variant Interpretation Working Groups
- Ronak Patel and ClinGen Baylor team for CNV calculator

ClinGen is primarily funded by the National Human Genome Research Institute (NHGRI), through the following three grants:U41HG006834, U41HG009649, U41HG009650

Today’s Attendance URL and QR code:

https://tinyurl.com/AttendanceJan302020

Case W
arr[GRCh37] 5q23.2 (125989631_126295396) x 3

45-year-old male with gait abnormalities

Clinical Information

- arr[GRCh37] 5q23.2 (125989631_126295396) x 3
- 45-year-old male referred for gait abnormalities
- Inheritance is unknown, parents are deceased. Patient reports father with history of ataxia and tremor.
- Use the GAIN scoring metric

Section 1: Initial Assessment of Genomic Content

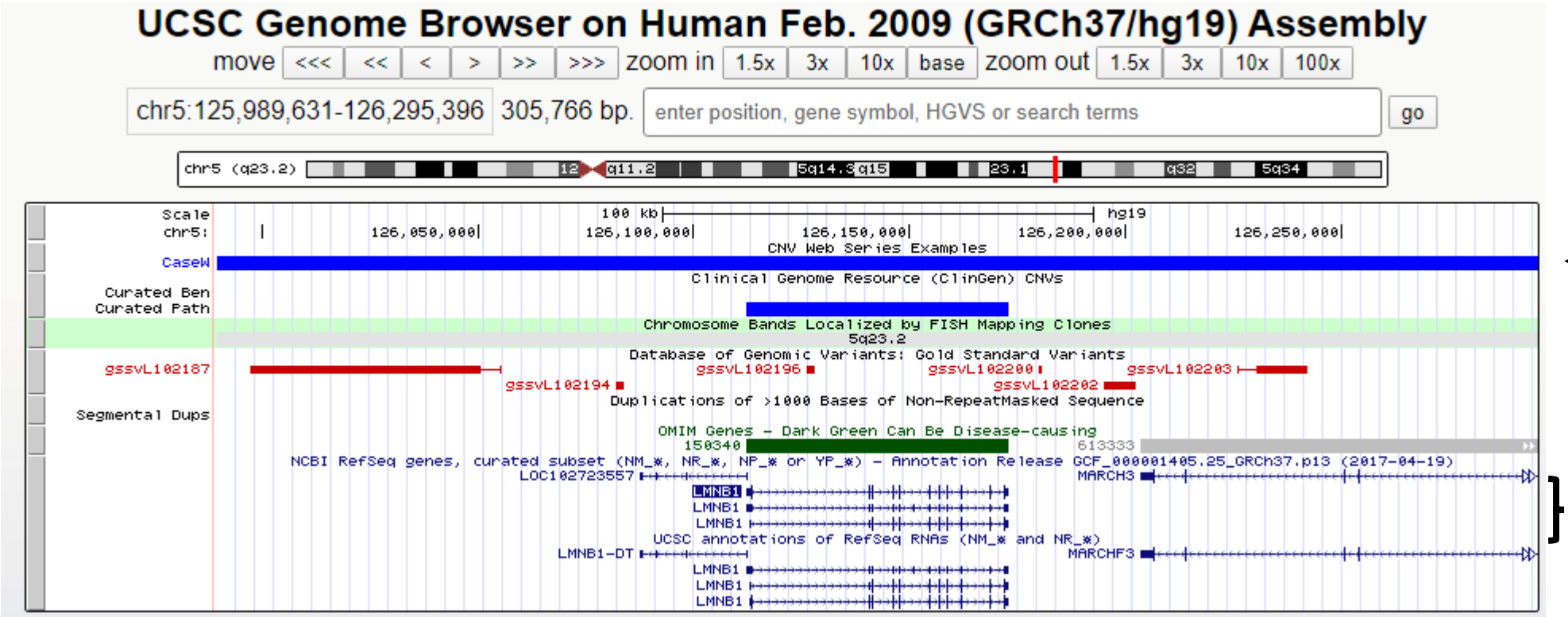

Case W

Genes contained

- Would apply category 1A (contains protein-coding or other known functionally important elements), as this duplication includes protein-coding genes.
- 0 points; continue evaluation

Total: 0 points

Section 2: Overlap with Established TS, HI, or Benign Genes/Genomic Regions

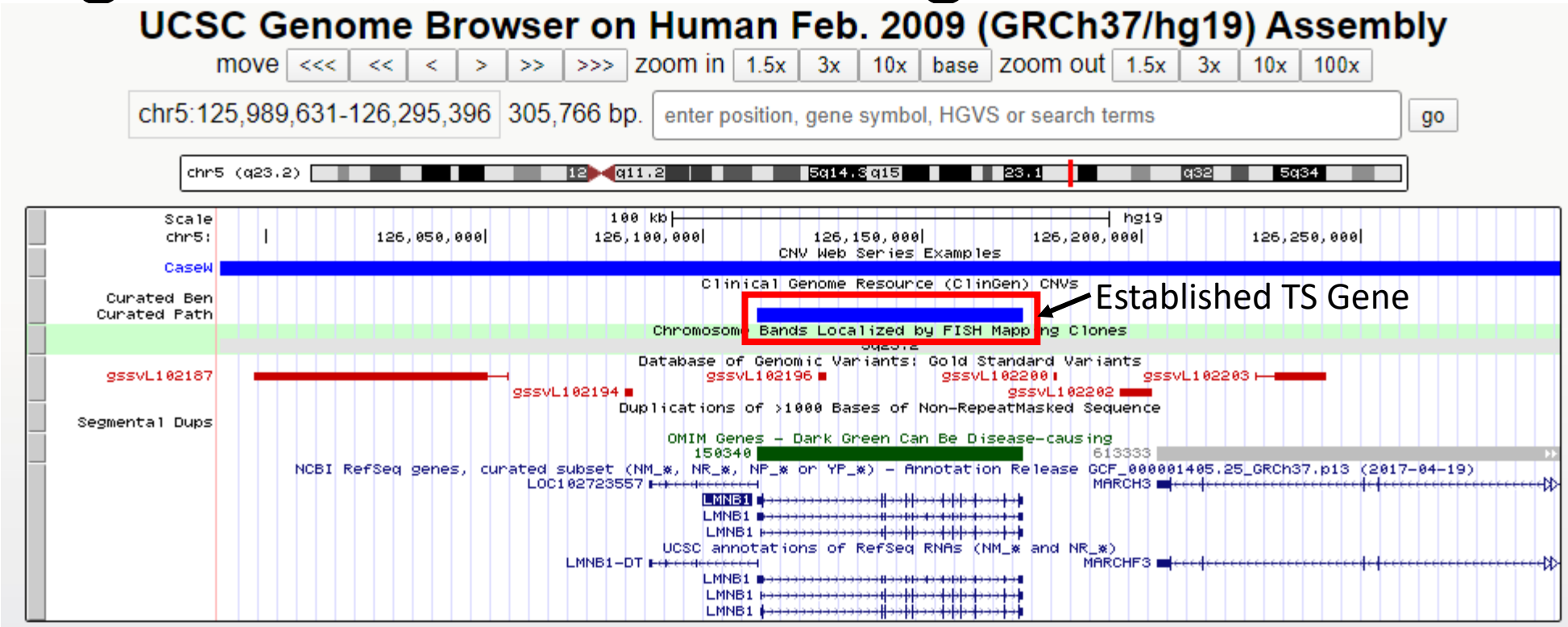

- This duplication does include an established TS gene. In a typical evaluation, this could lead you to a classification of Pathogenic.
- However, for the sake of this example, we will be ignoring this in order to focus on how to evaluate the case-level data in the event this gene had not already been curated by ClinGen Dosage Sensitivity.

Total: 0 points

Section 3: Evaluation of Gene Number

DECIPHER GRCh37 | About | Browse | DDD(UK) | Search DECIPHER | Join | Login

Search results for 'position:5:125989631-126295396' (Refine Search)

Open-access patients 31 | CNV Syndromes 1 | DDD Research Variants 0 | Genes 4

Results | Browser

Genes: 1 to 2 of 2 (out of 4 total)

Show: ☐ OMIM ☐ Morbid ☐ DDG2P ☑ Protein coding

Filter...

Name	Location	Description	OMIM	Morbid	DDG2P	%HI	pLI	Links
LMNB1	5 126112315 126172712	lamin B1	✔	✔	-	11.52	0.95	View
MARCH3	5 126203406 126366500	membrane associated ring-CH-type finger 3	✔	-	-	12.17	0.64	View

- There are only 2 protein-coding genes in the interval (category 3A, 0 points).

Total: 0 points

Section 4: Detailed Evaluation of Genomic Content

- Where to start?
  - *LMNB1* is an OMIM Morbid gene associated with autosomal dominant leukodystrophy (ADLD), so this is a logical first place to start.

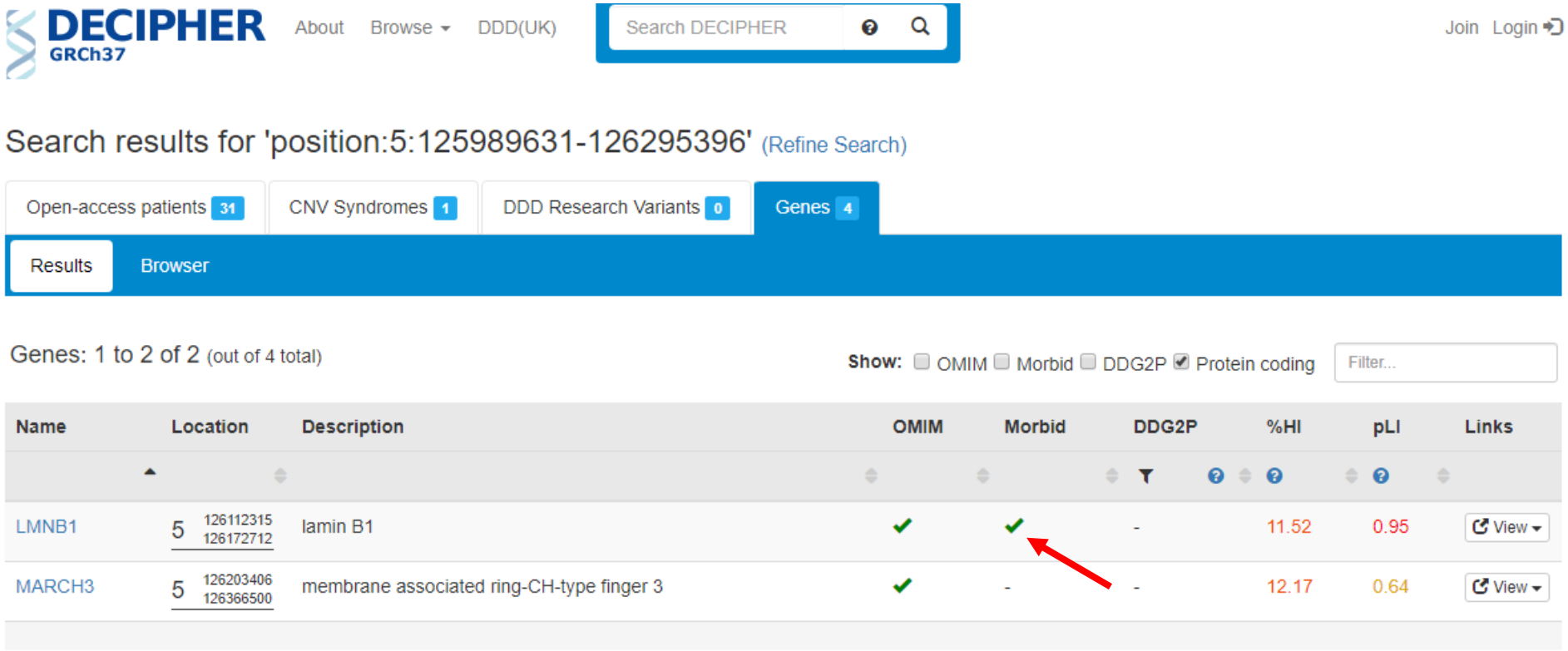

Autosomal Dominant Leukodystrophy

Suggestive Findings

Autosomal dominant leukodystrophy with autonomic disease (ADLD) **should be suspected** in adults with the following clinical and neuroimaging features:

Clinical features

- Onset in the fourth to fifth decade of signs and symptoms of autonomic dysfunction including bladder dysfunction, constipation, erectile dysfunction, and postural hypotension
- Subsequent onset of motor and cerebellar impairment resulting in spasticity, ataxia, and tremor

MRI findings. Specific brain and spine MRI findings that suggest the diagnosis of ADLD [Bergui et al 1997, Melberg et al 2006, Sundblom et al 2009] include the following:

- The cerebral white matter demonstrates symmetric T_2-weighted hyperintensities extending from the motor cortex, following corticospinal tracts downward through the posterior limb of the internal capsule toward the medulla oblongata. Over time the signal abnormalities extend from the frontoparietal lobe to the occipital lobe and finally the temporal lobe to become completely confluent (Figure 1C, thick arrow).
- U-fibers and optic radiations are usually spared.
- The periventricular white matter is usually spared or mildly affected.
- The upper and middle cerebellar peduncles are almost always involved with marked T_2-weighted hyperintensity; however, in rare instances they can be spared [Bergui et al 1997] (Figure 1A, thin arrow).
- Brain stem atrophy is present with increased signal intensity of the medulla oblongata. There is diffuse thinning and atrophy of the spinal cord, often with diffuse homogeneous T_2-weighted hyperintensity.
- Atrophy of the cerebrum, cerebellum, and corpus callosum may develop over time.
- No pathologic enhancement is seen after contrast administration.

  Note: The brain and spinal cord MRI findings can precede clinical manifestations by decades.

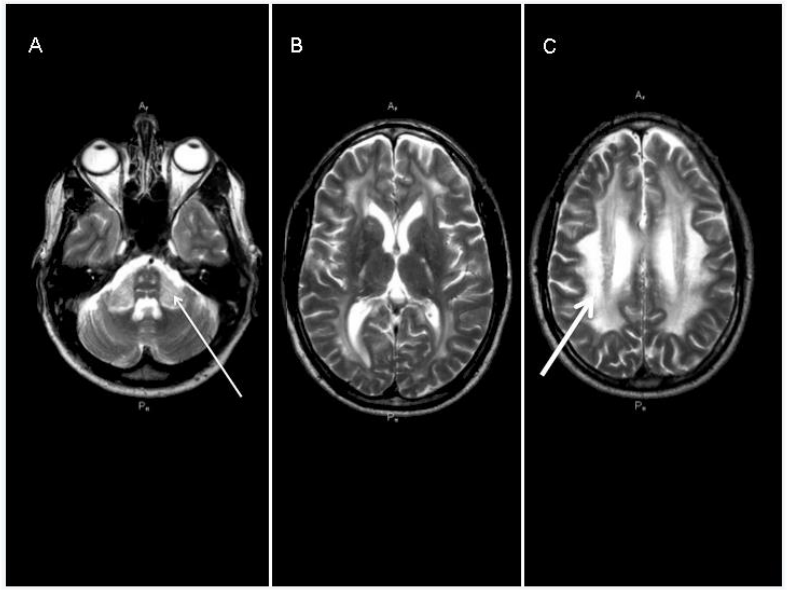

Figure 1.

T_2-weighted MRI from a male age 55 years with ADLD with sections through the brain stem (A), internal capsule (B), and parietal regions (C). Characteristic involvement of the middle cerebellar peduncles and brain stem features (A, thin arrow), and confluent supratentorial white matter changes involving the deep white matter (C, thick arrow) with relative sparing of the periventricular and U fibers and optic radiations. The corticospinal tracts are involved (A, B, C).

From GeneReviews – Nahas *et al.* "Autosomal Dominant Leukodystrophy with Autonomic Disease" https://www.ncbi.nlm.nih.gov/books/NBK338165/

PubMed.gov
US National Library of Medicine
National Institutes of Health

PubMed | lmnb1 | Search

Create RSS Create alert Advanced Help

Click here to try the
New PubMed!
An updated version of PubMed is now available.
Come see the new improvements to the interface!

Article types
Clinical Trial
Review
Customize ...

Text availability
Abstract
Free full text
Full text

Publication dates
5 years
10 years
Custom range...

Species
Humans
Other Animals

Clear all

Show additional filters

Format: Summary Sort by: Most Recent Per page: 20 Send to

See 85 articles about **LMNB1** gene function
See also: **LMNB1** lamin B1 in the Gene database
lmnb1 in Homo sapiens Mus musculus Rattus norvegicus All 276 Gene records
See also: 41 tests for **LMNB1** in the Genetic Testing Registry

Search results

Items: 1 to 20 of 115

<< First < Prev Page 1 of 6 Next > Last >>

1. An absence of lamin B1 in migrating neurons causes nuclear membrane ruptures and cell death.
Chen NY, Yang Y, Weston TA, Belling JN, Heizer P, Tu Y, Kim P, Edillo L, Jonas SJ, Weiss PS, Fong LG, Young SG.
Proc Natl Acad Sci U S A. 2019 Dec 17;116(51):25870-25879. doi: 10.1073/pnas.1917225116. Epub 2019 Dec 3.
PMID: 31796586
Similar articles

2. Genome-Wide Association Study of Body Mass Index and Body Fat in Mexican-Mestizo Children.
Costa-Urrutia P, Colistro V, Jiménez-Osorio AS, Cárdenas-Hernández H, Solares-Tlapechco J, Ramirez-Alcántara M, Granados J, Ascencio-Montiel IJ, Rodríguez-Arellano ME.
Genes (Basel). 2019 Nov 19;10(11). pii: E945. doi: 10.3390/genes10110945.
PMID: 31752434 Free PMC Article
Similar articles

Filters: Manage Filters

Sort by:
Best match | Most recent

Results by year

Download CSV

Titles with your search terms
An **LMNB1** Duplication Caused Adult-Onset Autosomal Dominant L [Front Mol Neurosci. 2017]
LMNB1 mutation causes cerebellar involvement and a genome instability defe [J Neurol Sci. 2017]
LMNB1-related autosomal-dominant leukodystrophy: Clinical and r [Ann Neurol. 2015]
See more...

PubMed.gov
US National Library of Medicine
National Institutes of Health

PubMed | lmnb1 duplication | Search

Create RSS Create alert Advanced Help

Click here to try the
New PubMed!
An updated version of PubMed is now available.
Come see the new improvements to the interface!

Article types
Clinical Trial
Review
Customize ...

Text availability
Abstract
Free full text
Full text

Publication dates
5 years
10 years
Custom range...

Species clear
✓ Humans
Other Animals

Clear all

Show additional filters

Format: Summary Sort by: Most Recent Per page: 20 Send to

Best matches for lmnb1 duplication:

Duplication and deletion upstream of **LMNB1** in autosomal dominant adult-onset leukodystrophy.
Mezaki N et al. Neurol Genet. (2018)

An **LMNB1 Duplication** Caused Adult-Onset Autosomal Dominant Leukodystrophy in Chinese Family: Clinical Manifestations, Neuroradiology and Genetic Diagnosis.
Dai Y et al. Front Mol Neurosci. (2017)

LMNB1-related autosomal-dominant leukodystrophy: Clinical and radiological course.
Finnsson J et al. Ann Neurol. (2015)

Switch to our new best match sort order

Search results

Items: 1 to 20 of 24

<< First < Prev Page 1 of 2 Next > Last >>

Filters activated: Humans. Clear all to show 33 items.

1. Glucose metabolism in the brain in **LMNB1**-related autosomal dominant leukodystrophy.
Finnsson J, Lubberink M, Savitcheva I, Fällmar D, Melberg A, Kumlien E, Raininko R.
Acta Neurol Scand. 2019 Feb;139(2):135-142. doi: 10.1111/ane.13024. Epub 2018 Sep 25.
PMID: 30192380 Free PMC Article
Similar articles

2. A longitudinal study of a family with adult-onset autosomal dominant leukodystrophy: Clinical, autonomic and neuropsychological findings.
Terlizzi R, Calandra-Buonaura G, Zanigni S, Barletta G, Capellari S, Guaraldi P, Donadio V, Cason E, Contin M, Poda R, Tonon C, Sambati L, Gallassi R, Liguori R, Lodi R, Cortelli P.
Auton Neurosci. 2016 Feb;195:20-6. doi: 10.1016/j.autneu.2016.02.005. Epub 2016 Feb 8.
PMID: 26896090
Similar articles

Filters: Manage Filters

Sort by:
Best match | Most recent

Titles with your search terms
Duplication and deletion upstream of **LMNB1** in autosomal [Neurol Genet. 2018]
An **LMNB1 Duplication** Caused Adult-Onset Autosomal Dominant L [Front Mol Neurosci. 2017]
See more...

Find related data
Database: Select
Find items

Search details
```
(lmnb1[All Fields] AND duplication[All Fields]) AND "humans"[MeSH Terms]
```
Search
See more...

Recent Activity
Turn Off Clear

Giorgio *et al.* 2013 (PMID:23649844)

- Describes detailed molecular analysis of the largest collection of ADLD families studied to date (31 individuals from 20 independent families)
  - Families from countries around the world: USA, Italy, Sweden, Germany, France, India, Canada, Israel, Brazil
    - Reassuring to see individuals coming from various ethnic groups, unlikely to be related
  - 9 had been described previously
    - Pay attention to this type of information to make sure you are not counting cases twice
  - Though duplications involving *LMNB1* had all been identified previously in these individuals through various methods, samples were reanalyzed by the authors for the purposes of defining the boundaries of the duplications
    - No comment was made on previous testing on any of the individuals to rule out other genetic causes of leukodystrophy
    - 16 unique duplications were identified

- Our case is very similar in genomic content to several of those reported in Giorgio.
- Any of these (with the possible, conservative exception of BR1) would be appropriate to use as case evidence
- This paper does not provide detailed information on family structure; the 6 previously unpublished cases here could be used in Category 4E (inheritance unknown).

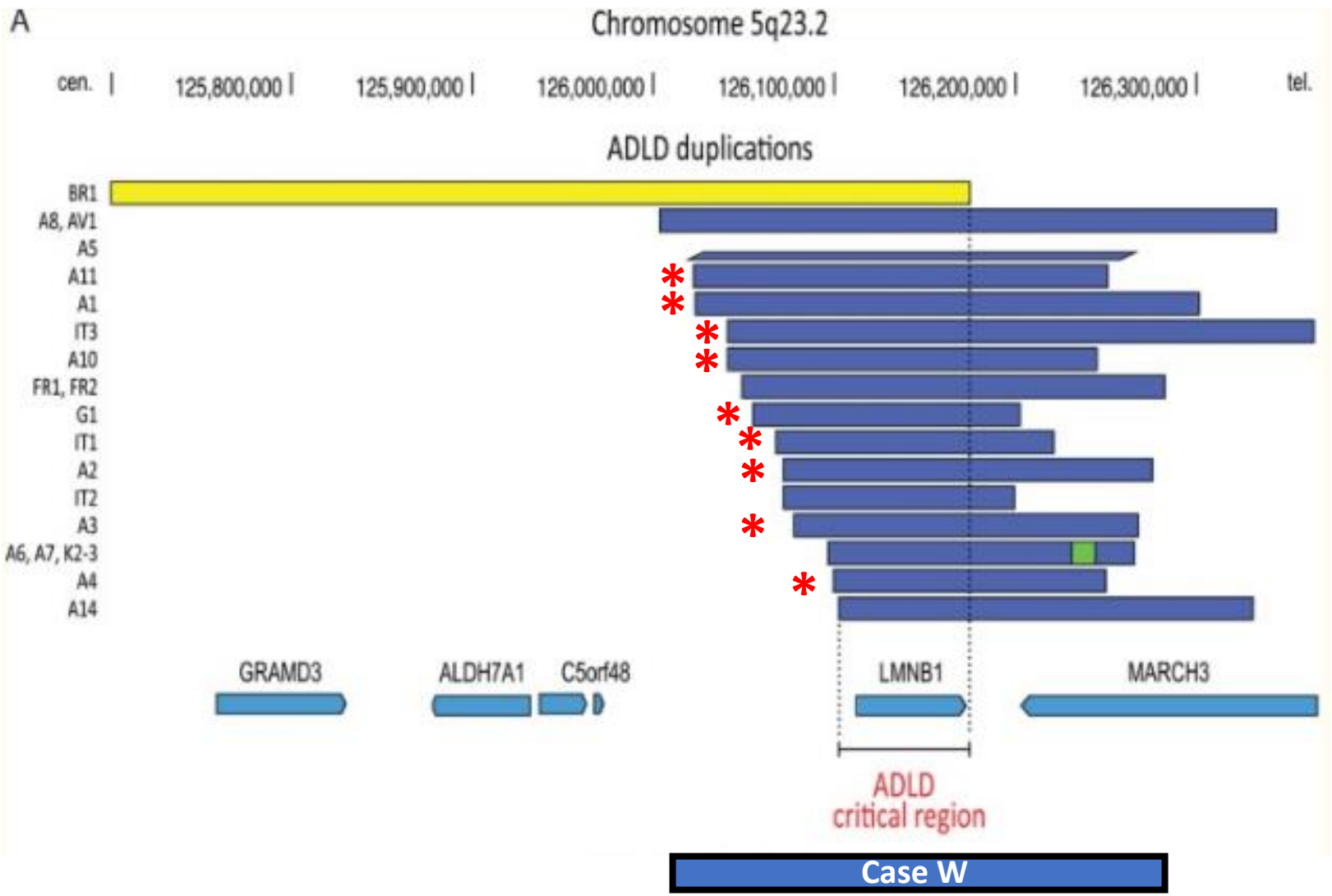

* Previously published

Giorgio *et al*. 2013, Figure 1A

Schuster *et al.* 2011 (A2, A3, A10, A11 in Giorgio *et al.)*

- 4 non-related families with ADLD with autonomic symptoms
  - 2 Swedish, 1 German, 1 Israeli (of Arab descent)
- Samples from one affected patient from each family were analyzed by genome-wide SNP array
- Western blot analyses of lamin B1 were done on 5 individuals from the 2 Swedish families (including both probands)
  - Showed significantly increased (~twofold) lamin B1 protein levels
  - Levels of *MARCH3* mRNA were similar between patients and controls

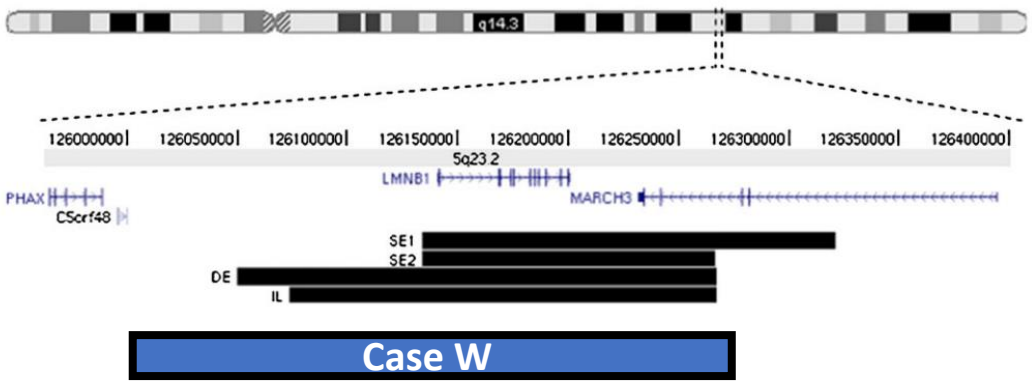

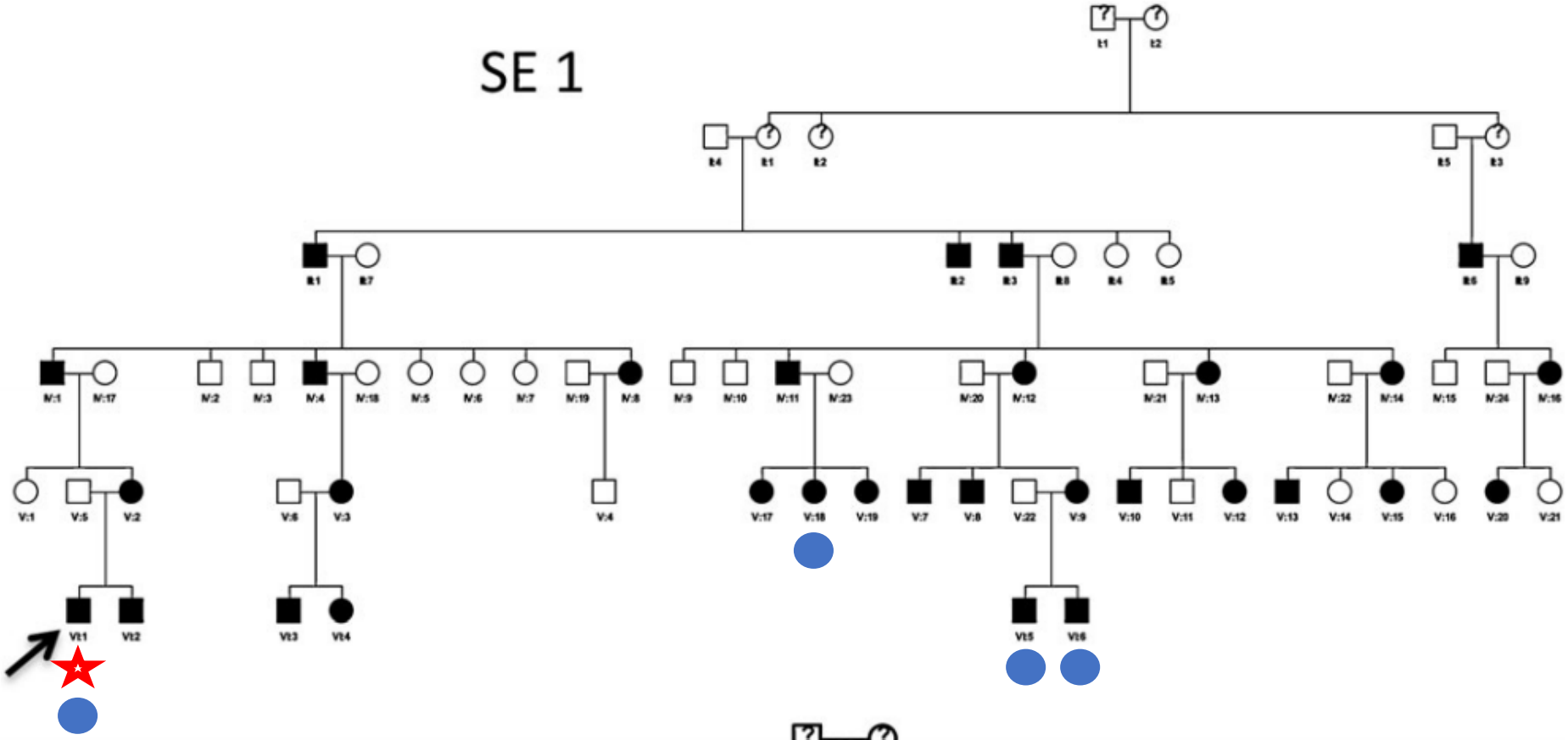

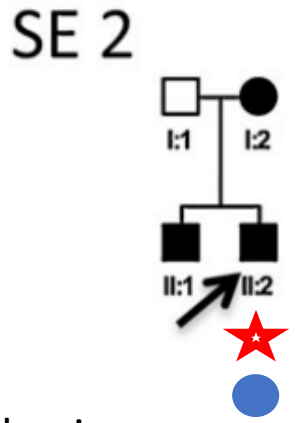

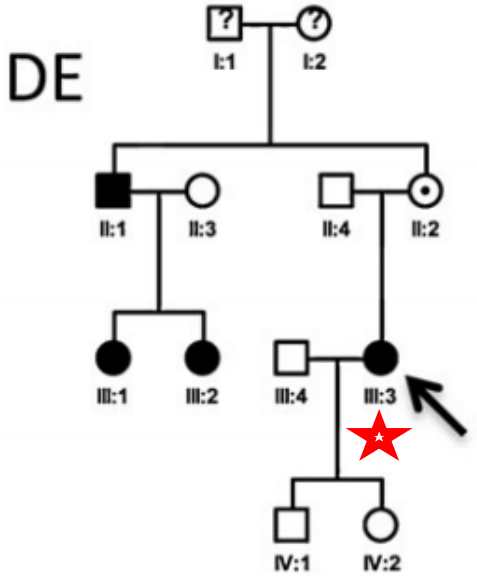

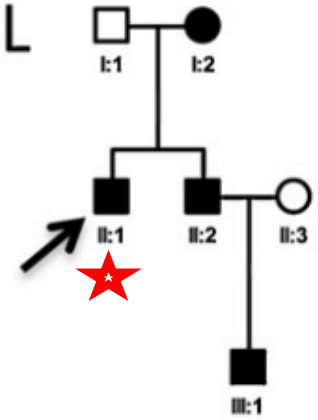

= genotype +

= sig. increased lamin B1 protein levels

Dos Santos *et al.* 2011 (G1 in Giorgio *et al.)*

- 47-year-old male with 2-year history of:
  - Gait disturbance
  - Micturition problems
  - Personality changes
- Brain MRI: bilateral T2-hyperintense lesions in the subcortical and deep cerebral white matter
- Normal: lumbar puncture, nerve conduction studies, electromyography, AAs, LCFAs, and lysosomal enzymes
- 5q32.2 duplication involving *LMNB1* gene identified on array in proband and 44-year-old sister
  - Sister asymptomatic, but was also found to have hyperintense lesions of the subcortical and deep cerebral white matter on brain MRI

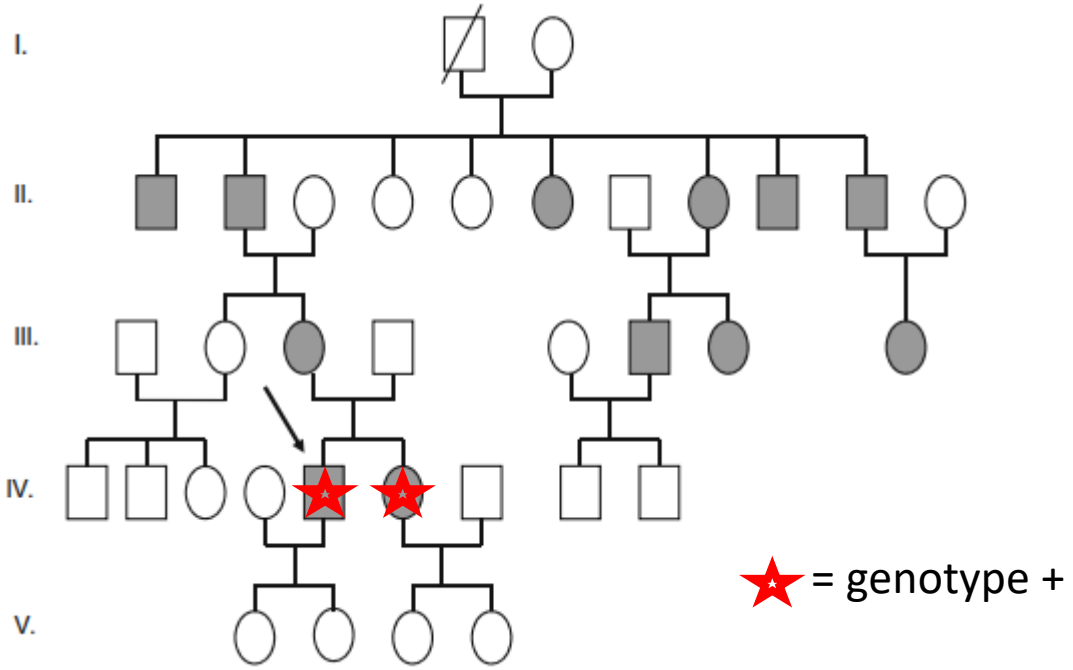

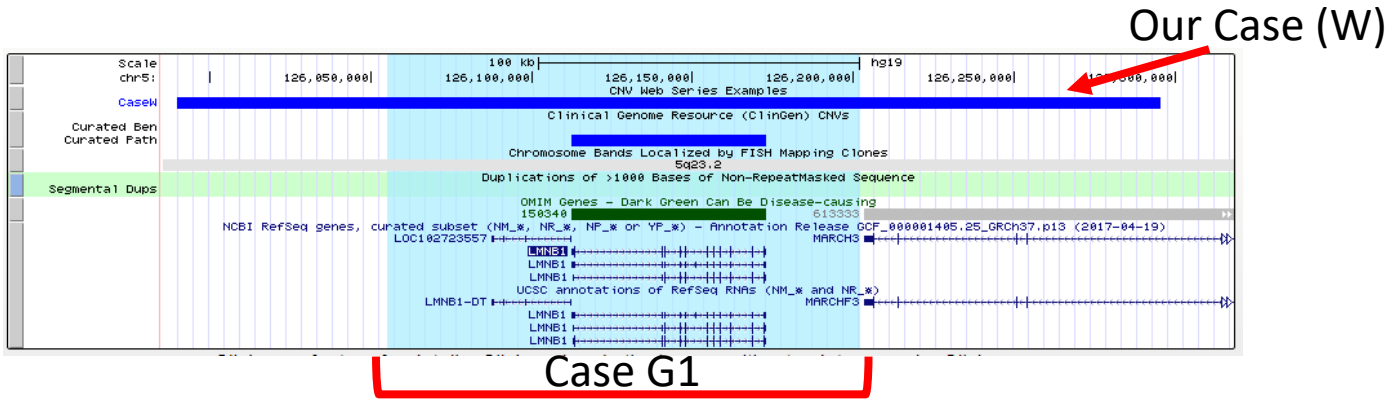

PMID:21909802

Other cases: Padiath *et al*. 2006

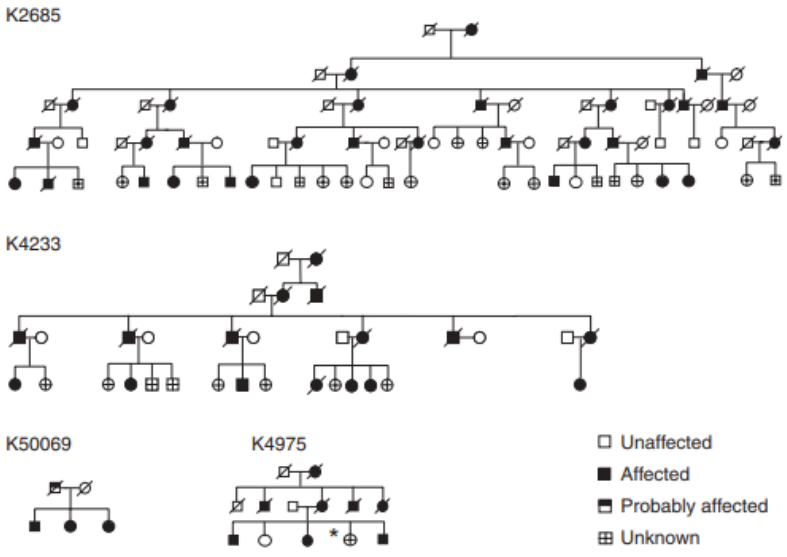

Figure 1 Pedigree charts of ADLD families. See Results section for details on analysis of genomic copy number variation.

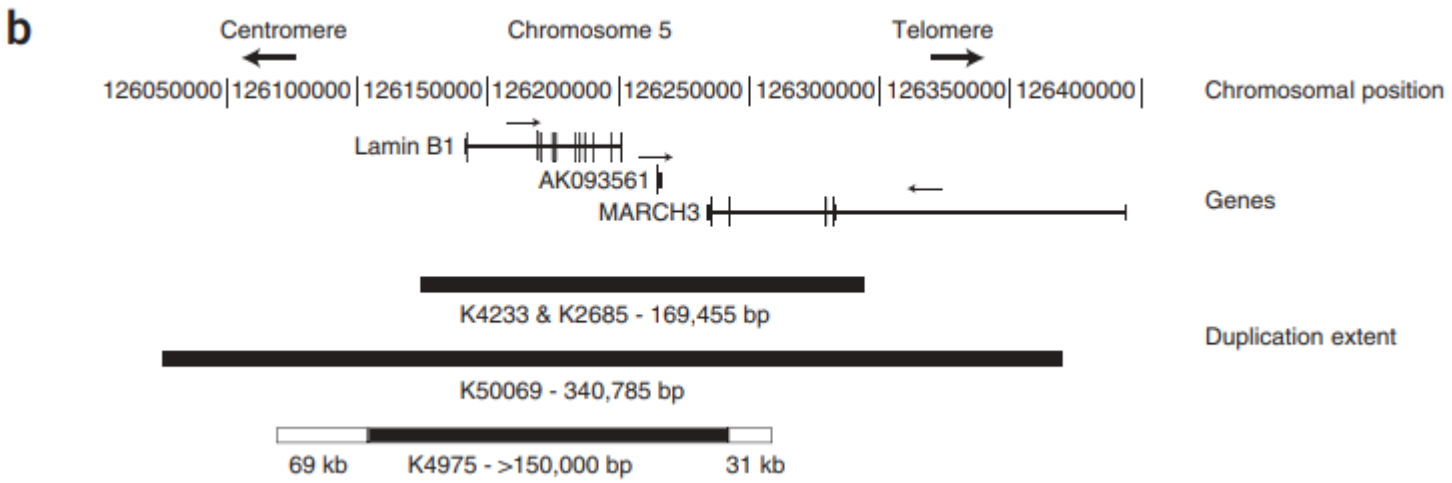

- Describe 3 unique duplications from 4 families involving *LMNB1* with variable involvement of the nearby *MARCH3* gene
  - 2 Irish-American families with identical duplications – thought to arise by a common founder
- Candidate gene evaluation prompted by linkage analysis
- Functional studies show:
  - Lamin B1 is overexpressed in brain tissue of affected individuals
  - Increased expression of lamin B1 in flies resulted in a degenerative phenotype
  - No difference in *MARCH3* expression on Northern blot in brain tissue of affected individual vs. control
- Paper does not specify who was tested in each family/which individuals confirmed to have variant

PMID:16951681

Other cases: Potic *et al.* 2013

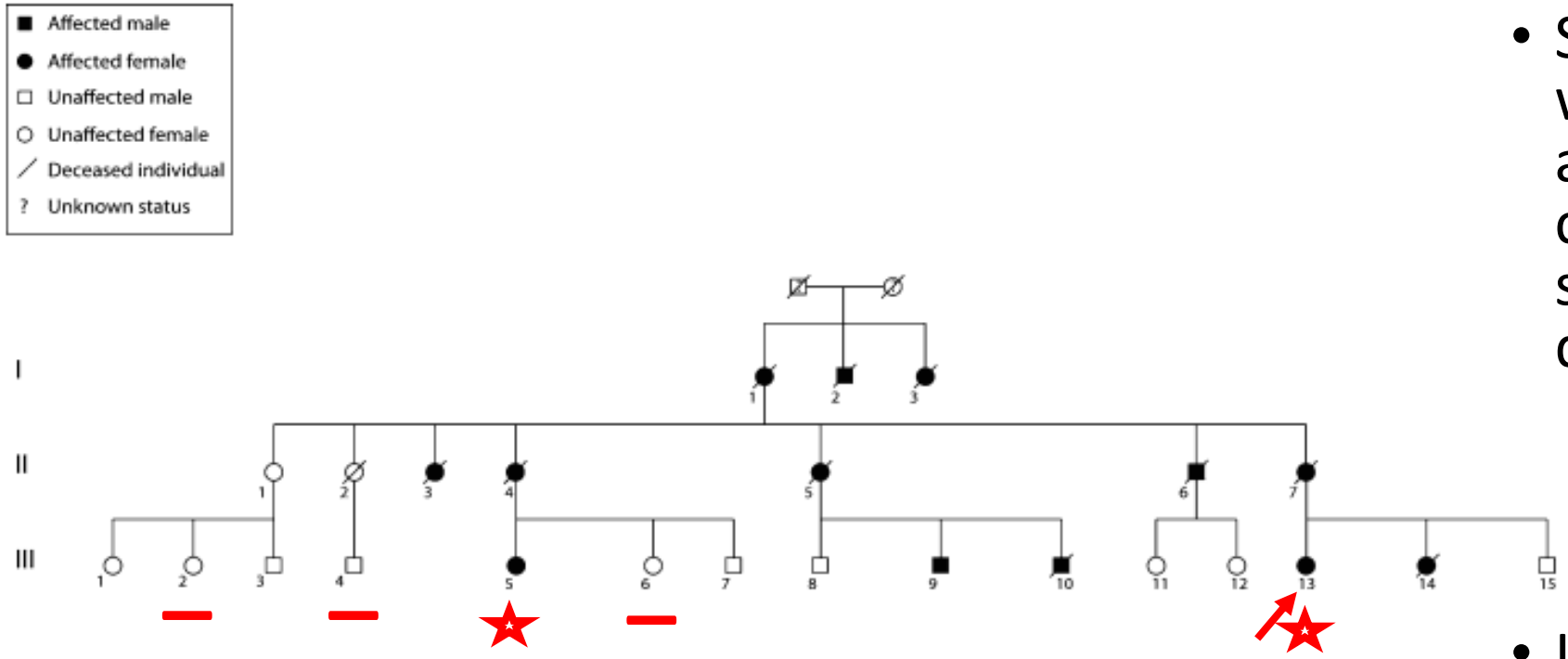

Genotype -

Genotype +

- Serbian family presenting with progressive pyramidal and cerebellar signs, slow cognitive decline, and late-stage autonomic dysfunction
  - MRIs show bilateral T2-hyperintense lesions in the subcortical and deep cerebral white matter
- LMNB1 copy number assessed by quantitative RT-PCR

…and many other cases available in the literature

PMID:23681646

Putting it all together…

- We have a wealth of information indicating that duplications of *LMNB1* cause autosomal dominant leukodystrophy (ADLD)
  - Genetic evidence from at least 15 probands (with more in the literature)
  - Functional evidence showing increased lamin B1 protein levels in probands (leukocytes and brain tissue); overexpression in flies causes a degenerative phenotype; normal mRNA levels of frequently involved neighbor gene *MARCH3* (likely more in literature)
- However, this scenario doesn't neatly fit our "rules"
  - Testing not consistently done on affected family members – can't demonstrate genotype+ status for segregation
  - No known *de novo* cases
  - Hitting category maximums

A note about category maximums

Evidence Type	Evidence	Suggested Points/Case	Max Score
Individual case evidence—unknown inheritance	**4E**. Reported proband has a highly specific phenotype consistent with the gene/genomic region, but the inheritance of the variant is unknown.	0.10 points each *(range: 0 to 0.15)*	0.30 (total)
Individual case evidence—segregation among similarly affected family members	**4F**. 3–4 observed segregations	0.15	0.45
	4G. 5–6 observed segregations	0.30	
	4H. 7 or more observed segregations	0.45	

- Category maximums were put in place to prevent certain evidence types from taking a case all the way to Pathogenic on their own without other, supportive information
- Goal is to encourage the collection of diverse pieces of information if available/appropriate
- In some circumstances, however, this is not possible
  - Consider carefully if your situation warrants override of category maximum

Trying to avoid scenarios like this:

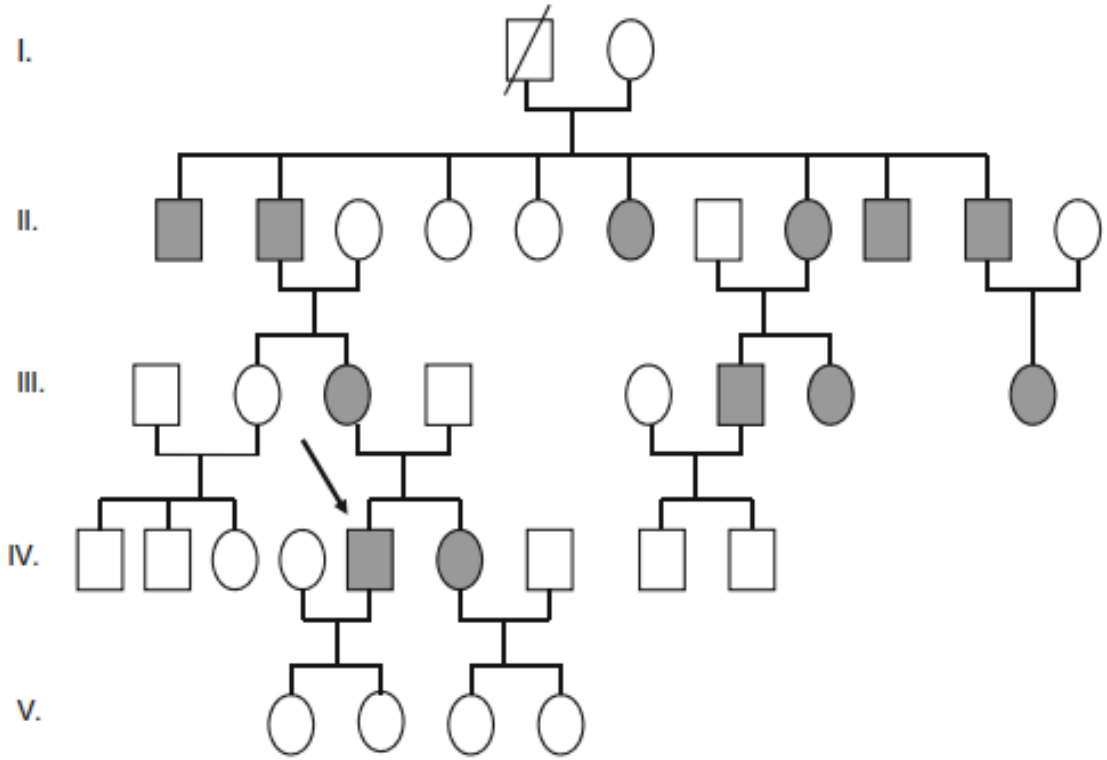

- If all of these people were genotype+, this family would have 11 segregations
- If we allowed increasing segregation data to score up to 1.0 points, a single family could drive the classification of a variant.
- This would be inappropriate, as segregation implicates a locus, not a variant.

In our case, we have:

- 15 different probands, all with positive family history, some with documentable segregation
- Supportive functional data
- Because the phenotype is adult-onset and does not appear to impact reproductive fitness, we have families with numerous affected individuals and no (documented) *de novo* cases
  - Achieving a variety of genetic evidence types is not possible in this case. This is a well-studied gene-disease relationship with extensive evidence, and an example of when it would be appropriate to override category maximums.

Segregations (being conservative)

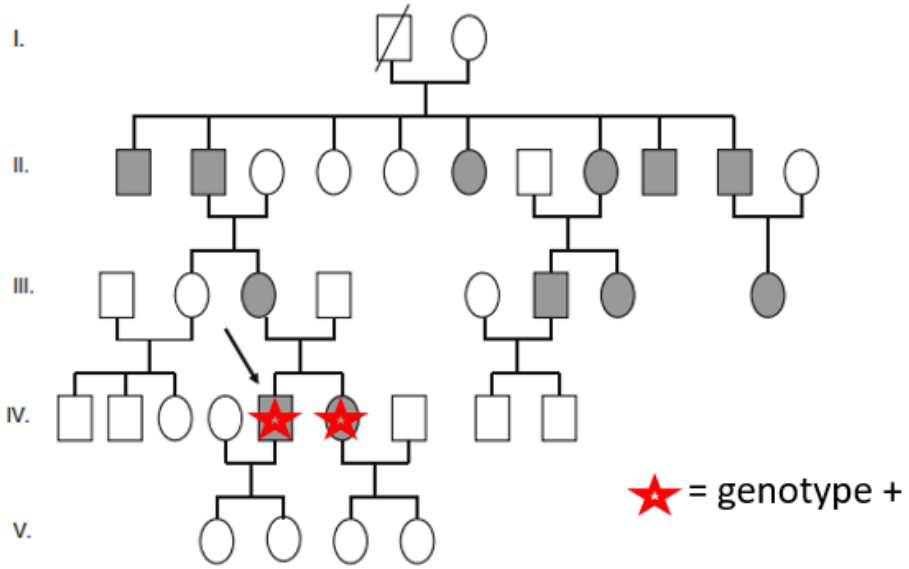

Dos Santos *et al.* 2011 - 1

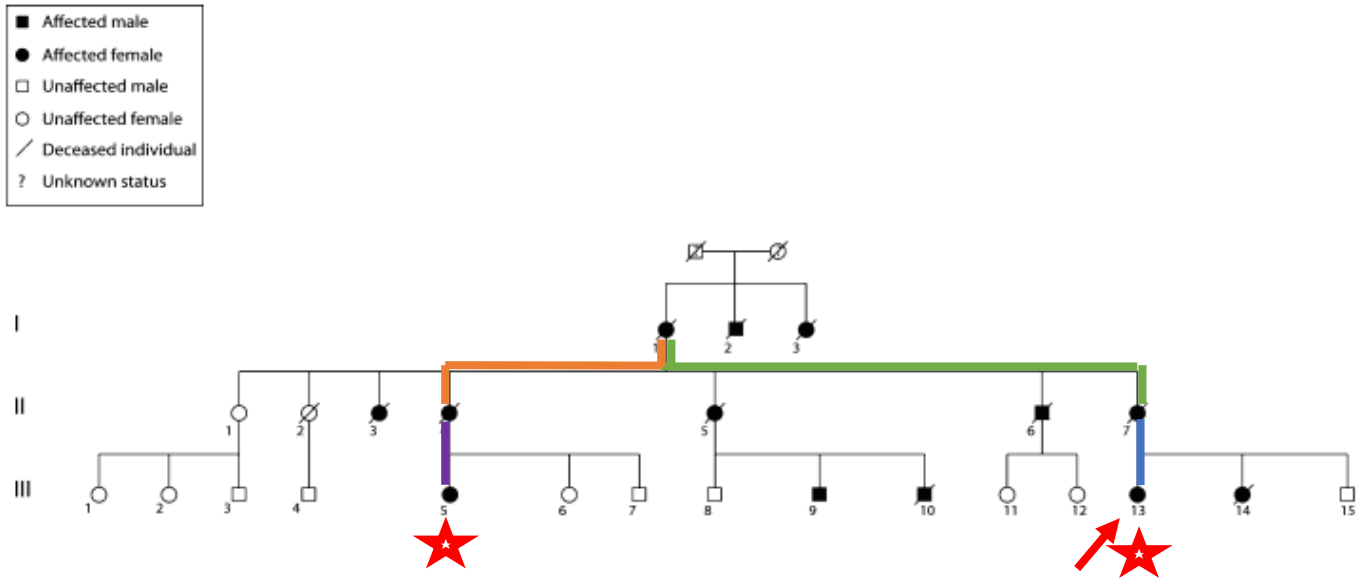

Potic *et al.* 2013 (counting intervening obligate carriers) – 4

Total: 5 segregations (0.30 points)

What about the rest of the cases?

- Could count the other 13 cases at the most conservative level (0.10 points each): > 1.0 points in addition to the segregation data
  - This is the same amount of points assigned for assumed *de novo*, non-specific phenotype (4C) and specific phenotype, unknown inheritance (4E)
  - The number of observed cases, not the number of segregations, is driving this classification
  - The specificity of the phenotype, the large amount of data, and the supportive functional data can all serve as rationale for this scoring change

Category 5: Incorporating our patient's data

- Our patient is a 45-year-old man with "gait abnormalities." His parents are deceased, but he reports a history of a father with ataxia and tremor.
- This is consistent with ADLD, but could also be indicative of a number of other things.
  - Quick search for "gait abnormalities" among Clinical Synopses in OMIM returns over 1000 matches
- With this information alone, consider scoring with Category 5G (nonspecific but consistent phenotype)
- When you call the ordering clinician to discuss the case, they reveal that the patient has had a brain MRI, which demonstrated findings consistent with leukodystrophy.
  - OMIM Clinical Synopses search for "leukodystrophy" = 47 results
  - With this more specific information, consider awarding full points within Category 5H (up to 0.30).

Summary

- PATHOGENIC
- Evidence supporting pathogenicity includes:
  - numerous (13+) probands with similar duplications reported in the literature with diagnoses of ADLD (scoring at 0.10 points each = >1.0 points)
  - At least two families with documented segregation of the duplication among affected family members (0.30 points)
  - Patient under evaluation has a phenotype consistent with what has been previously reported (0.30 points with MRI evidence of leukodystrophy)
  - Supportive functional data